B.E.G. LUXOMAT®



PD4-M-DACO-GH-SM DALI-2

93469 EAN: 4007529934690

DALI-2 PIR motion sensor with integrated DALI application controller, 360° coverage, and a detection area of up to 30 x 19 m (440 m²) at a mounting height of 16 m, for high-bay warehouses

Order data

Designation	Colour	Art.No
PD4-M-DACO-GH-SM DALI-2	white	93469

Areas of application

- high-bay warehouse
- sports halls/ storage rooms

Accessories

Designation	Colour	Art.No
BLE-IR-Adapter	black	93067
IR-Adapter for Smartphones	black	92726
IR-PD-DALI	-	92094
IR-PD-DALI-LD	-	92652
IR-PD-DALI-E	-	92122
IR-PD-DALI-Mini	-	92112
Wire basket BSK (Ø 200 x 90 mm)	white	92199
Blinds PD4	transparent	92313
Pendulum mounting set PD2/3/4 SM	jet black	93193
Pendulum mounting set PD2/3/4 SM	white	93179

Technical data

Voltage:	230 V AC ±10% 50 Hz
Dimensions:	Ø 101 x 76 mm
Power consumption:	approx. 2 W
Slave devices:	up to 8
Detection area:	horizontal 360° oval (Ceiling mounting)
Range:	30 m x 19 m
Monitored area (tangential movement):	440 m² / 14 m mounting height
Mounting height min./max./recommended:	5 m / 16 m / 14 m
Degree / class of protection:	IP54 / Class II
Impact strength:	IK04
Ambient temperature:	-25 °C to +50 °C
Housing:	polycarbonate, UV-resistant
Material color:	white mat, similar to RAL9010
Channel 1 (lighting control)	
DALI output:	80 mA (guaranteed), 125 mA (max.), shut down mechanism
Supported control gear:	DT0, DT5, DT6, DT7
Supported control devices:	- (single master)
Follow-up time:	1 min – 150 min
Orientation light:	10 – 30 % / OFF / 5 min – 60 min / ∞
Brightness set value:	10 – 2500 Lux
Light measuring:	Mixed light measuring

Product information

Occupancy detector for large heights with integrated DALI application controller for energy-efficient lighting control

External telescopic light sensor for a mounting height between 5 and 16 m (mechanically adjustable) for measuring the light according to the application.

DALI-2 certified product

Integrated DALI power supply

DALI interface for controlling digital, dimmable ECGs in broadcast mode

Manual switching or dimming via conventional pushbuttons

Bidirectional IR communication enables fast integration into the project management function of the B.E.G. One app

Complete range of functions can only be activated using the BLE-IR-Adapter and a compatible Smartphone or Tablet (Android, iOS).

Semi-automatic, full automatic, presence-independent or light-independent mode adjustable

Adjustable regulation dynamics (minimum and maximum values)

Adjustable speed and delay of the regulation

Single master version, not networkable

Detection area can be extended by using slave devices

Mixed light measurement with external light sensor

DALI output power can be increased with accessories

Integrated daylight harvesting circuit (or switch output)

Adjustable switch-on value

Last value - Reminder function for switch-on value

Adjustable brightness set value and reflection factor

Indication of the current light sensor value in the B.E.G. One App

Self-check and display of device errors in the B.E.G. One App

Status LEDs can be activated / deactivated

PIN code

Corridor function - Deactivates the possibility to switch off the light via the push-button

Number of DALI participants can be determined quickly and reliably via the B.E.G. Online DALI Line Planner

For further information
https://www.beg-luxomat.com/en-au/solutions/areas-of

-application/great-mounting-heights/

Software is backwards compatible with the first generation (except DSI, double lock and corridor function)

Factory setting 10 min follow-up time and 500 lux brightness set value

There are markings to ensure correct alignment during installation

When used in high-bay warehouses, care should be taken that, in the cross-aisles of the warehouse, detectors are installed that can detect movement only in the desired aisle locations, by using blinds or other technical arrangements.

Surface-mount version

Application examples:
high-bay warehouse, sports halls/ storage rooms

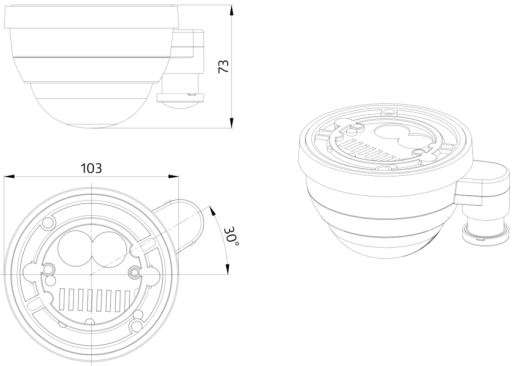
73
103
30°

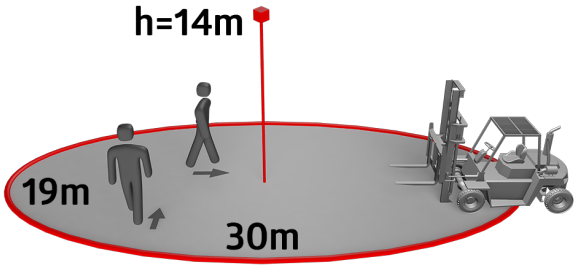
h=14m
19m
30m

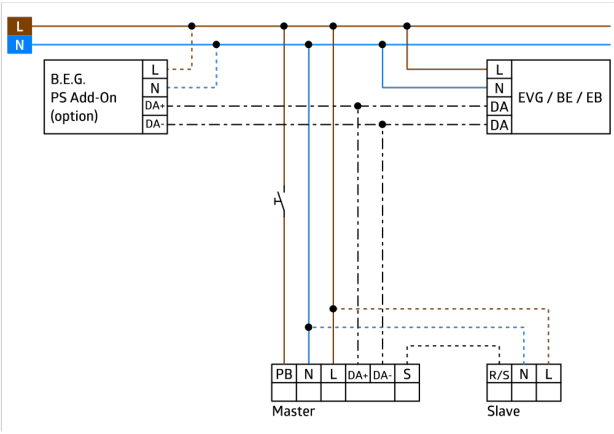
L
N
B.E.G.
PS Add-On
(option)
L
N
DA+
DA-
L
N
DA
DA
EVG / BE / EB
PB
N
L
DA+
DA-
S
Master
R/S
N
L
Slave

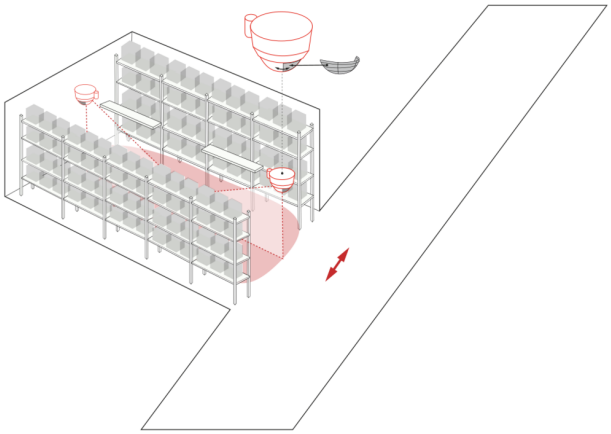

Accessories



BLE-IR-Adapter
Art.No: 93067

Dimensions: 40 x 55 x 103 mm
Material color: black
Frequency: 2.4 GHz ISM band, GFSK 0.2 dBm + 5.3 dBi = 5.5 dBm



IR-Adapter for Smartphones
Art.No: 92726

Dimensions: 47 x 19 x 10 mm
Degree / class of protection: IP20
Ambient temperature: -20 °C to +40 °C

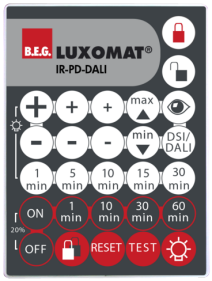

IR-PD-DALI
Art.No: 92094

Battery: 3.0 V Lithium CR2032 (inclusive)
Dimensions: 80 x 60 x 8 mm
Material color: -



IR-PD-DALI-LD
Art.No: 92652

Battery: 3 x 1.5 V Micro AAA (not included)
Dimensions: 83 x 53 x 17 mm
Material color: -



IR-PD-DALI-E
Art.No: 92122

Battery: 3.0 V Lithium CR2032 (inclusive)
Dimensions: 80 x 60 x 8 mm
Material color: -



IR-PD-DALI-Mini
Art.No: 92112

Battery: 3.0 V Lithium CR2032 (inclusive)
Dimensions: 57 x 35 x 7 mm
Material color: -

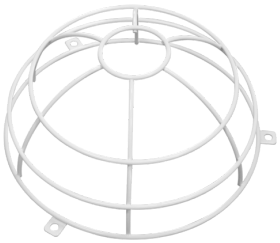

Wire basket BSK (Ø 200 x 90 mm)
Art.No: 92199

Dimensions: Ø 200 x 90 mm
Impact strength: IK09
Housing: coated steel basket



Blinds PD4
Art.No: 92313

Housing: Housing UV- and shockresistant Polycarbonate
Material color: transparent



Pendulum mounting set PD2/3/4 SM
Art.No: 93193

Dimensions: 1 : Ø 113 x 79 mm, 2 : Ø 113 x 34 mm
Housing: polycarbonate, UV-resistant
Material color: jet black, similar to RAL9005



Pendulum mounting set PD2/3/4 SM
Art.No: 93179

Dimensions: 1 : Ø 113 x 79 mm, 2 : Ø 113 x 34 mm
Housing: polycarbonate, UV-resistant
Material color: white, similar to RAL9010