B.E.G. LUXOMAT®



PD4-M-DAA4G-SM

92743 EAN: 4007529927432

DALI PIR motion detector with integrated DALI application controller, 360° detection, and a range of up to Ø24m (450 m²), Multimaster, with switching relay

Order data

Designation	Colour	Art.No
PD4-M-DAA4G-SM	white	92743

Areas of application

- conference rooms
- classrooms/seminar rooms

Accessories

Designation	Colour	Art.No
BLE-IR-Adapter	black	93067
Socket IP54 PD4-TRIO-SM	white	92386
Wire basket BSK (Ø 164 x 143 mm)	white	92467
Wire basket BSK (Ø 200 x 90 mm)	white	92199
Blinds PD4	transparent	92313
Pendulum mounting set PD2/3/4 SM	jet black	93193
Pendulum mounting set PD2/3/4 SM	white	93179

Technical data

Voltage:	110 – 240 V AC 50 / 60 Hz
Dimensions:	Ø 124 x 85 mm
Power consumption:	approx. 0.4 W
Detection area:	horizontal 360° (Ceiling mounting)
Range:	max. Ø 24 m across max. Ø 8 m towards max. Ø 6.4 m seated
Monitored area (tangential movement):	450 m² / 2.5 m mounting height
Mounting height min./max./recommended:	2 m / 10 m / 2.5 m
Degree / class of protection:	IP20 / Class II
Impact strength:	IK04
Ambient temperature:	-25 °C to +50 °C
Housing:	polycarbonate, UV-resistant
Material color:	white mat, similar to RAL9010
DALI Control	
DALI output:	up to 64 DALI ballasts , can be grouped into 3 DALI groups plus blackboard lighting or HVAC control
Follow-up time:	1 min – 150 min (Lighting zones)
Orientation light:	10 – 30 % / OFF / 5 min – 60 min / ∞
Brightness set value:	10 – 2000 Lux
Relay (dry NO)	
Switching power:	2300 W, cos φ = 1 1150 VA, cos φ = 0.5 300 W LED
Follow-up time:	5 sec – 120 min (HVAC)
Light measuring:	Mixed light measuring

Product information

Flexible DALI Compact solution designed for conference rooms, training rooms and classrooms

High-sensitivity occupancy detector with the capability to address up to 64 DALI electronic ballasts (EB) automatically, with segmented control via 4 groups

Quick commissioning and maintenance processes via Smartphone/Tablet App (Android, iOS) - No PC-Tool required

3 lighting zones:
A for main lighting with segmented constant light regulation via 3 DALI groups and offset control,
B for lectern or blackboard lighting via separate DALI group,
C for lectern or blackboard lighting by integrated relay

Powerful switching relay for different operating modes, e.g. Cut-off function for DALI ballasts, HVAC, blackboard illumination.

Manual switching or dimming via conventional pushbuttons

Detection area can be extended with up to four Slave devices of type PD4-S-DAA4G

Complete range of functions can only be activated using the B.E.G. IR Adapter or the BLE-IR-Adapter and a compatible Smartphone or Tablet (Android, iOS).

External light sensor can be swivelled by 45

Avoidance of standby losses of the lighting system in accordance with EnEV DIN V 18599-4

Application examples:
conference rooms, classrooms/seminar rooms

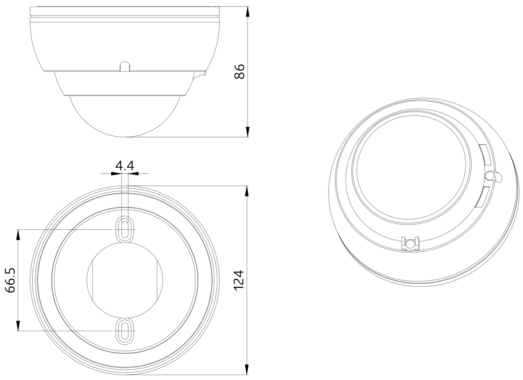
86
4.4
66.5
124

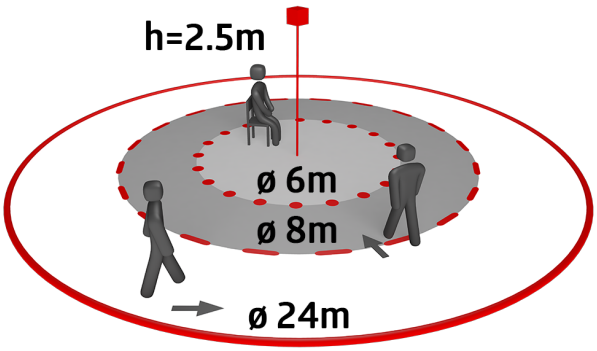
h=2.5m
ø 6m
ø 8m
ø 24m

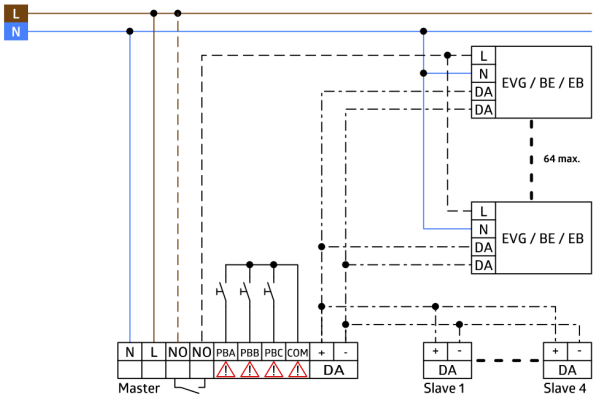
L
N
L
N
DA
DA
EVG / BE / EB
64 max.
L
N
DA
DA
EVG / BE / EB
N
L
NO
NO
PBA
PBB
PBC
COM
+
-
DA
Master
+
-
DA
Slave 1
+
-
DA
Slave 4

Accessories



BLE-IR-Adapter
Art.No: 93067

Dimensions: 40 x 55 x 103 mm
Material color: black
Frequency: 2.4 GHz ISM band, GFSK 0.2 dBm + 5.3 dBi = 5.5 dBm



Socket IP54 PD4-TRIO-SM
Art.No: 92386

Degree / class of protection: IP54
Housing: polycarbonate, UV-resistant
Material color: white



Wire basket BSK (Ø 164 x 143 mm)
Art.No: 92467

Dimensions: Ø 164 x 143 mm
Impact strength: IK09
Housing: coated steel basket

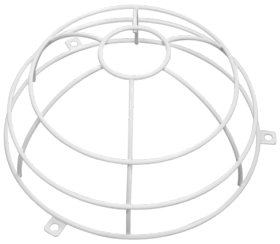

Wire basket BSK (Ø 200 x 90 mm)
Art.No: 92199

Dimensions: Ø 200 x 90 mm
Impact strength: IK09
Housing: coated steel basket



Blinds PD4
Art.No: 92313

Housing: Housing UV- and shockresistant Polycarbonate
Material color: transparent



Pendulum mounting set PD2/3/4 SM
Art.No: 93193

Dimensions: 1 : Ø 113 x 79 mm, 2 : Ø 113 x 34 mm
Housing: polycarbonate, UV-resistant
Material color: jet black, similar to RAL9005



Pendulum mounting set PD2/3/4 SM
Art.No: 93179

Dimensions: 1 : Ø 113 x 79 mm, 2 : Ø 113 x 34 mm
Housing: polycarbonate, UV-resistant
Material color: white, similar to RAL9010