B.E.G. LUXOMAT®



PD4-M-2C-FM Set 92255-92992

230V 2-channel PIR motion detector with 360° detection and a range of up to Ø24m (450 m²), remote-controlled

Order data

Designation	Colour	Art.No
PD4-M-2C-FM	white	92255
Square design frame PD4-FC	pure white	92992

Areas of application

- open-plan offices
- conference rooms
- classrooms/seminar rooms
- entrance halls
- corridors/hallways
- sports halls/ storage rooms

Technical data

Voltage:	110 – 240 V AC 50 / 60 Hz
Dimensions:	Ø 104 x 70 mm
Power consumption:	approx. 0.5 W
Detection area:	horizontal 360° (Ceiling mounting)
Range:	max. Ø 24 m across max. Ø 8 m towards max. Ø 6.4 m seated
Monitored area (tangential movement):	450 m² / 2.5 m mounting height
Mounting height min./max./recommended:	2 m / 10 m / 2.5 m
Degree / class of protection:	IP20 / Class II
Impact strength:	IK04
Ambient temperature:	-25 °C to +50 °C
Housing:	polycarbonate, UV-resistant
Material color:	white mat, similar to RAL9010
Channel 1 (lighting control)	
Switching power:	2300 W, cos φ = 1 1150 VA, cos φ = 0.5 800 W LED max. inrush current Ip (20 ms) = 165 A max. inrush current Ip (200 µs) = 800 A
Type of contact (k):	1x µ-contact, NO contact with tungsten pre-make contact
Follow-up time:	15 sec – 30 min, Pulse
Switch-on threshold:	10 – 2000 Lux
Channel 2 (HVAC control potential-free (dry))	
Switching power:	3 A (230 V), cos φ = 1
Type of contact:	1x dry NO contact
Follow-up time:	5 min – 120 min, Alarm pulse, Pulse
Light measuring:	Mixed light measuring

Product information

Set : PD4-M-2C-FM + Square design frame PD4-FC pure white mat, similar to RAL9010

Occupancy detector with extended detection area

One channel for light switching

One additional potential-free (dry) contact for HVAC

Version as master device

Detection area can be extended by using slave devices

Manual switching via push-button possible

Additional functions can be set up using the optional remote control.

Alarm pulse: the detector triggers only when three movements are detected within 9 seconds

Factory settings 10 min and 500 lux (15 min HVAC)

Zero crossing switching

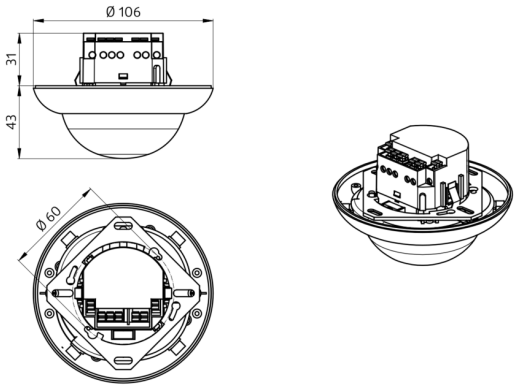
Ø 106
31
43
Ø 60

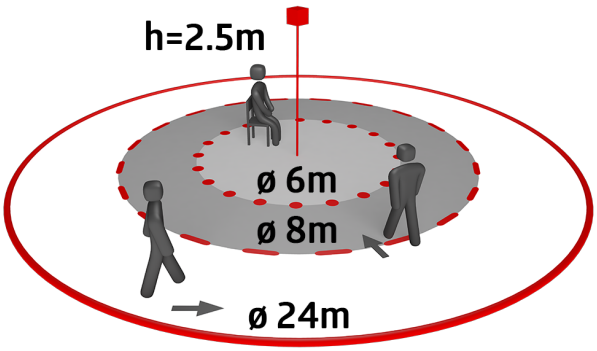
h=2.5m
ø 6m
ø 8m
ø 24m

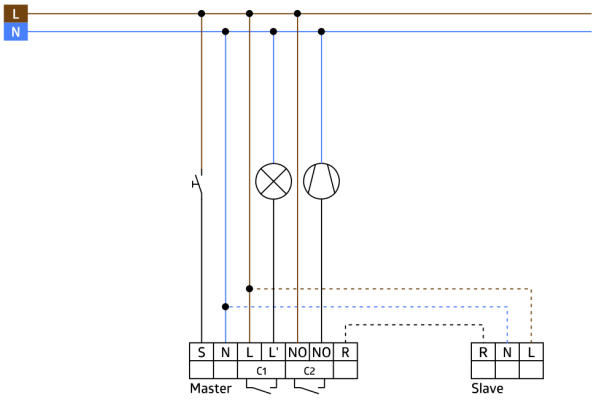
L
N
S
N
L
L'
NO
NO
R
C1
C2
Master
R
N
L
Slave

Set items

To receive the bundle according to the technical specification, please order the items listed.



PD4-M-2C-FM
Art.No: 92255

Voltage: 110 – 240 V AC 50 / 60 Hz
Dimensions: Ø 104 x 70 mm
Power consumption: approx. 0.5 W

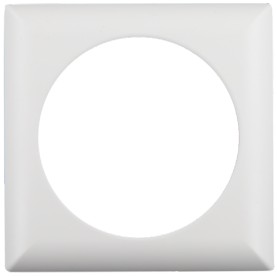

Square design frame PD4-FC
Art.No: 92992

Dimensions: 101 x 101 x 11.8 mm
Housing: polycarbonate, UV-resistant
Material color: pure white mat, similar to RAL9010