B.E.G. LUXOMAT®



PD4-M-2C-DS-SM Set 92761-92199

230V 2-channel PIR motion detector with 360° detection and a range of up to Ø24m (450 m²), remote-controlled, and 2 electrically isolated groups

Order data

Designation	Colour	Art.No
PD4-M-2C-DS-SM	white	92761
Wire basket BSK (Ø 200 x 90 mm)	white	92199

Areas of application

- entrance halls
- corridors/hallways
- staircases
- toilets
- equipment rooms

Technical data

Voltage:	110 – 240 V AC 50 / 60 Hz
Dimensions:	**Ø 200 x 90 mm (92199)**
Power consumption:	< 1.5 W
Detection area:	horizontal 360° (Ceiling mounting)
Range:	max. Ø 24 m across max. Ø 9 m towards max. Ø 8 m seated
Monitored area (tangential movement):	450 m² / 2.5 m mounting height
Mounting height min./max./recommended:	2 m / 10 m / 2.5 m
Degree / class of protection:	IP20 / Class II
Impact strength:	**IK09 (92199)**
Ambient temperature:	-25 °C to +50 °C
Housing:	**polycarbonate, UV-resistant + coated steel basket (92199)**
Material color:	white mat, similar to RAL9010
Connections and wires:	0.5 ... 1.5 mm² rigid
Channel 1 and Channel 2 (lighting control)	
Switching power:	2300 W, cos φ = 1 1150 VA, cos φ = 0.5 800 W LED max. inrush current Ip (20 ms) = 165 A max. inrush current Ip (200 µs) = 800 A
Type of contact (k):	2x µ-contact, NO contact with tungsten pre-make contact
Follow-up time:	15 sec – 60 min, Pulse
Switch-on threshold:	10 – 2000 Lux
Light measuring:	Mixed light measuring

Product information

Set : PD4-M-2C-DS-SM + Wire basket BSK (Ø 200 x 90 mm) white

Occupancy detector connectable to two different phases

2 channels for switching light: the illumination system can be divided into two separate groups being electrically isolated.

Version as master device

Extension of the detection area with one additional PD4-M-2C-DS configured as a Slave device

Manual switching possible via a shared pushbutton

Additional functions can be set up using the optional remote control.

Factory settings 10 min and 500 lux

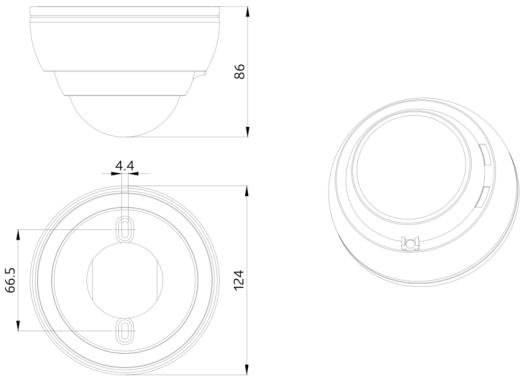
86
4.4
66.5
124

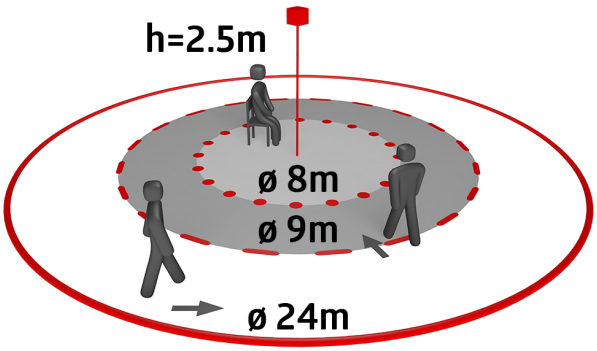
h=2.5m
ø 8m
ø 9m
ø 24m

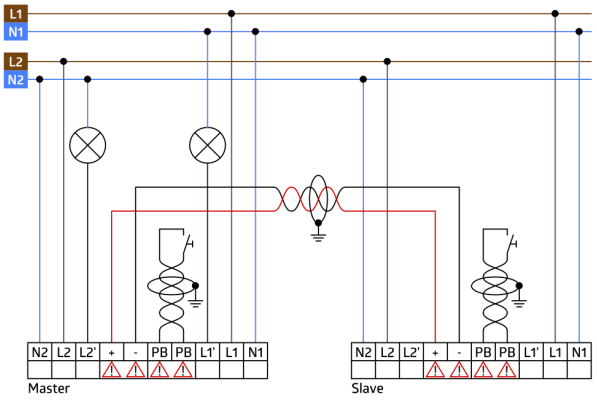
L1
N1
L2
N2
N2 L2 L2' + - PB PB L1' L1 N1
Master
N2 L2 L2' + - PB PB L1' L1 N1
Slave

Set items

To receive the bundle according to the technical specification, please order the items listed.



PD4-M-2C-DS-SM
Art.No: 92761

Voltage: 110 – 240 V AC 50 / 60 Hz
Dimensions: Ø 124 x 85 mm
Power consumption: < 1.5 W

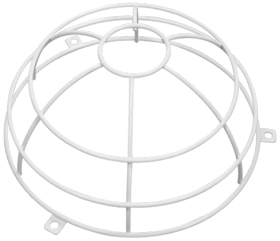

Wire basket BSK (Ø 200 x 90 mm)
Art.No: 92199

Dimensions: Ø 200 x 90 mm
Impact strength: IK09
Housing: coated steel basket