B.E.G. LUXOMAT®



PD4-M-1C-SM Set
92580-92375

230V PIR motion detector with 360° detection and a range of up to Ø24m (450 m²), remote-controlled

Order data

Designation	Colour	Art.No
PD4-M-1C-SM	white	92580
Surface mounting socket IP65 for PD4-SM IP20	white	92375

Areas of application

- open-plan offices
- conference rooms
- classrooms/seminar rooms
- corridors/hallways

Technical data

Voltage:	110 – 240 V AC 50 / 60 Hz
Dimensions:	Ø 98 x 63 mm
Power consumption:	approx. 0.4 W
Detection area:	horizontal 360° (Ceiling mounting)
Range:	max. Ø 24 m across max. Ø 8 m towards max. Ø 6.4 m seated
Monitored area (tangential movement):	450 m² / 2.5 m mounting height
Mounting height min./max./recommended:	2 m / 10 m / 2.5 m
Degree / class of protection:	IP20 / Class II
Impact strength:	IK04
Ambient temperature:	-25 °C to +50 °C
Housing:	polycarbonate, UV-resistant
Material color:	white mat, similar to RAL9010
Channel 1 (lighting control, potential-free (dry))	
Switching power:	2300 W, cos φ = 1 1150 VA, cos φ = 0.5 800 W LED max. inrush current Ip (20 ms) = 165 A max. inrush current Ip (200 µs) = 800 A
Type of contact (k):	1x µ-contact, dry NO contact with tungsten pre-make contact
Follow-up time:	15 sec – 30 min, Pulse
Switch-on threshold:	10 – 2000 Lux
Light measuring:	Mixed light measuring

Product information

Set : PD4-M-1C-SM + Surface mounting socket IP65 for PD4-SM IP20 white

Occupancy detector with extended detection area

One potential-free (dry) contact

Version as master device

Detection area can be extended by using slave devices

Manual switching via push-button possible

Additional functions can be set up using the optional remote control.

Factory settings 10 min and 500 lux

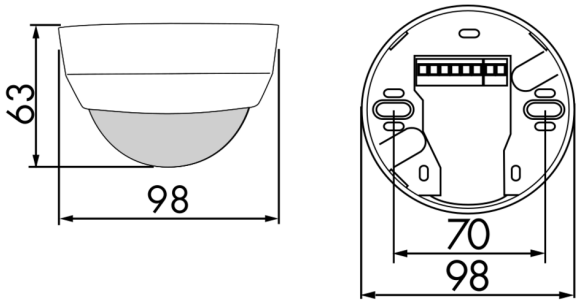
63
98
70
98

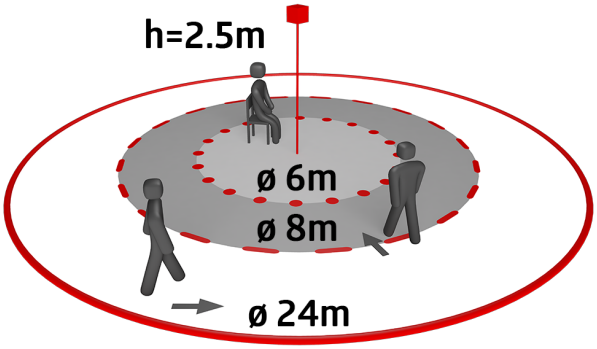
h=2.5m
ø 6m
ø 8m
ø 24m

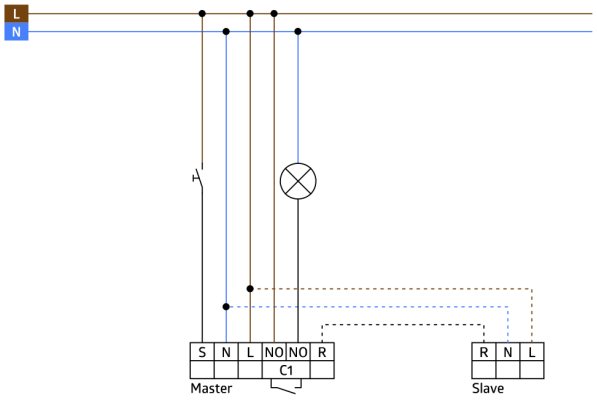
L
N
S
N
L
NO
NO
R
C1
Master
R
N
L
Slave

Set items

To receive the bundle according to the technical specification, please order the items listed.



PD4-M-1C-SM
Art.No: 92580

Voltage: 110 – 240 V AC 50 / 60 Hz
Dimensions: Ø 98 x 63 mm
Power consumption: approx. 0.4 W



Surface mounting socket IP65 for PD4-SM IP20
Art.No: 92375

Dimensions: Ø 115 x 70 mm
Degree / class of protection: IP65
Impact strength: IK07