B.E.G. LUXOMAT®



PD4-M-1C-GH-SM Set 92245-92375

230V PIR motion detector with 360° coverage and a detection area of up to 30 x 19 m (440 m²) at a mounting height of 16 m, for high-bay warehouses

Order data

Designation	Colour	Art.No
PD4-M-1C-GH-SM	white	92245
Surface mounting socket IP65 for PD4-SM IP20	white	92375

Areas of application

- high-bay warehouse
- sports halls/ storage rooms

Technical data

Voltage:	110 – 240 V AC 50 / 60 Hz
Dimensions:	Ø 98 x 63 mm
Power consumption:	approx. 0.5 W
Detection area:	horizontal 360° oval (Ceiling mounting)
Range:	30 m x 19 m
Monitored area (tangential movement):	440 m² / 14 m mounting height
Mounting height min./max./recommended:	5 m / 16 m / 14 m
Degree / class of protection:	IP20 / Class II
Impact strength:	IK04
Ambient temperature:	-25 °C to +50 °C
Housing:	polycarbonate, UV-resistant
Material color:	white mat, similar to RAL9010
Channel 1 (lighting control, potential-free (dry))	
Switching power:	2300 W, cos φ = 1 1150 VA, cos φ = 0.5 800 W LED max. inrush current Ip (20 ms) = 165 A max. inrush current Ip (200 µs) = 800 A
Type of contact (k):	1x µ-contact, dry NO contact with tungsten pre-make contact
Follow-up time:	15 sec – 30 min, Pulse
Switch-on threshold:	20 – 2000 Lux
Light measuring:	Mixed light measuring

Product information

Set : PD4-M-1C-GH-SM + Surface mounting socket IP65 for PD4-SM IP20 white

Occupancy detector designed for high-bay warehouses

One potential-free (dry) switching contact

Version as master device

Detection area can be extended by using slave devices

Easy operation with remote control (required)

Manual switching via push-button possible

For further information
https://www.beg-luxomat.com/en-au/solutions/areas-of-application/great-mounting-heights/

There are markings to ensure correct alignment during installation

When used in high-bay warehouses, care should be taken that, in the cross-aisles of the warehouse, detectors are installed that can detect movement only in the desired aisle locations, by using blinds or other technical arrangements.

Factory settings 3 min and 1000 lux

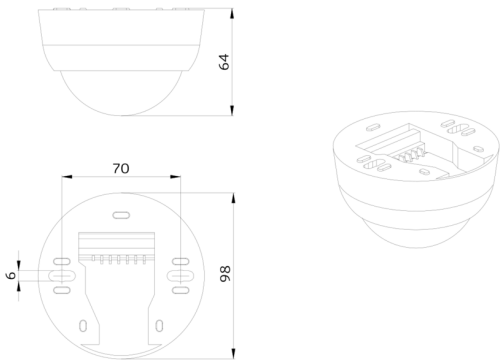
64
70
98
6

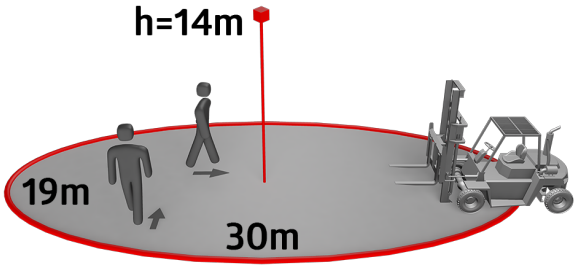
h=14m
19m
30m

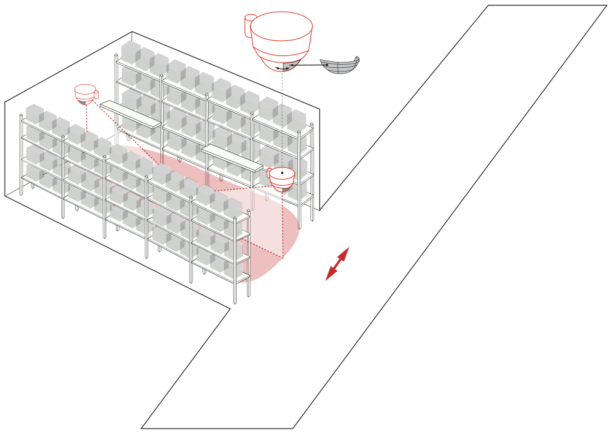

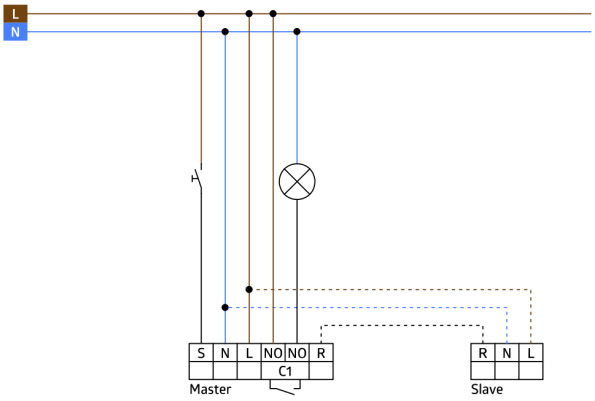
L
N
S
N
L
NO
NO
R
C1
Master
R
N
L
Slave

Set items

To receive the bundle according to the technical specification, please order the items listed.



PD4-M-1C-GH-SM
Art.No: 92245

Voltage: 110 – 240 V AC 50 / 60 Hz
Dimensions: Ø 98 x 63 mm
Power consumption: approx. 0.5 W



Surface mounting socket IP65 for PD4-SM IP20
Art.No: 92375

Dimensions: Ø 115 x 70 mm
Degree / class of protection: IP65
Impact strength: IK07