B.E.G. LUXOMAT®



PD4-M-1C-FM Set 92575-92199

230V PIR motion detector with 360° detection and a range of up to Ø24m (450 m²), remote-controlled

Order data

Designation	Colour	Art.No
PD4-M-1C-FM	white	92575
Wire basket BSK (Ø 200 x 90 mm)	white	92199

Areas of application

- corridors/hallways
- toilets
- equipment rooms

Technical data

Voltage:	110 – 240 V AC 50 / 60 Hz
Dimensions:	**Ø 200 x 90 mm (92199)**
Power consumption:	approx. 0.4 W
Detection area:	horizontal 360° (Ceiling mounting)
Range:	max. Ø 24 m across max. Ø 8 m towards max. Ø 6.4 m seated
Monitored area (tangential movement):	450 m² / 2.5 m mounting height
Mounting height min./max./recommended:	2 m / 10 m / 2.5 m
Degree / class of protection:	IP20 / Class II
Impact strength:	**IK09 (92199)**
Ambient temperature:	-25 °C to +50 °C
Housing:	**polycarbonate, UV-resistant + coated steel basket (92199)**
Material color:	white mat, similar to RAL9010
Channel 1 (lighting control, potential-free (dry))	
Switching power:	2300 W, cos φ = 1 1150 VA, cos φ = 0.5 800 W LED max. inrush current Ip (20 ms) = 165 A max. inrush current Ip (200 µs) = 800 A
Type of contact (k):	1x µ-contact, dry NO contact with tungsten pre-make contact
Follow-up time:	15 sec – 30 min, Pulse
Switch-on threshold:	10 – 2000 Lux
Light measuring:	Mixed light measuring

Product information

Set : PD4-M-1C-FM + Wire basket BSK (Ø 200 x 90 mm) white

Occupancy detector with extended detection area

One potential-free (dry) contact

Version as master device

Detection area can be extended by using slave devices

Manual switching via push-button possible

Additional functions can be set up using the optional remote control.

Factory settings 10 min and 500 lux

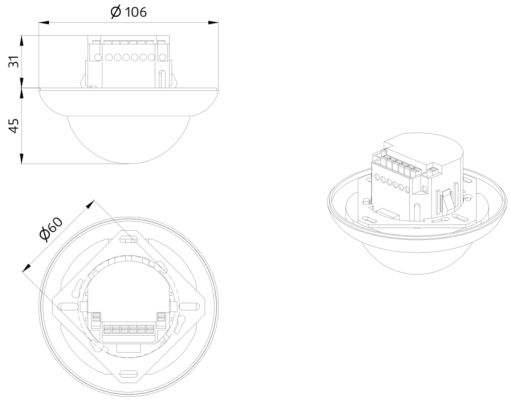
Ø 106
31
45
Ø60

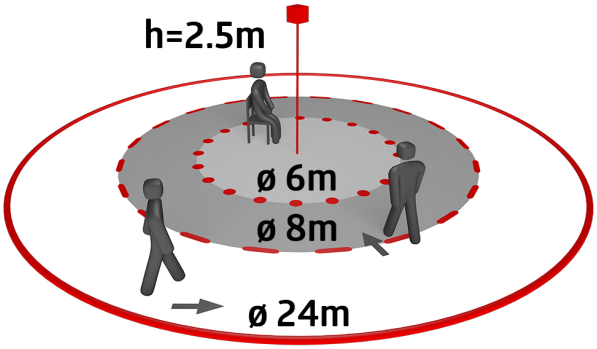
h=2.5m
ø 6m
ø 8m
ø 24m

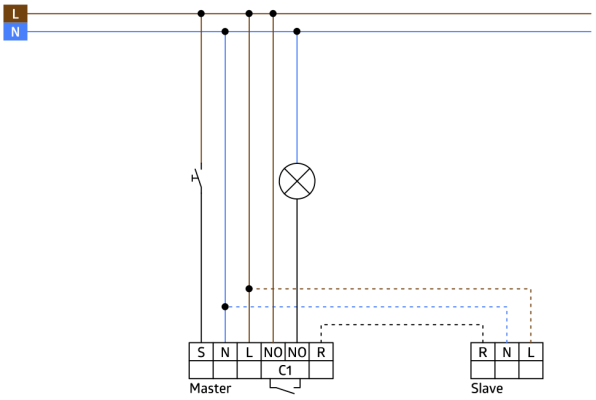
L
N
S
N
L
NO
NO
R
C1
Master
R
N
L
Slave

Set items

To receive the bundle according to the technical specification, please order the items listed.



PD4-M-1C-FM
Art.No: 92575

Voltage: 110 – 240 V AC 50 / 60 Hz
Dimensions: Ø 104 x 70 mm
Power consumption: approx. 0.4 W

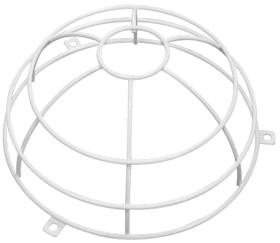

Wire basket BSK (Ø 200 x 90 mm)
Art.No: 92199

Dimensions: Ø 200 x 90 mm
Impact strength: IK09
Housing: coated steel basket