B.E.G. LUXOMAT®



PD4-M-1C-C-FC Set 92586-92199

230V PIR motion sensor with 360° coverage and a detection area of up to 40x5m (250 m²), suitable for hallways and remote-controlled

Order data

Designation	Colour	Art.No
PD4-M-1C-C-FC	white	92586
Wire basket BSK (Ø 200 x 90 mm)	white	92199

Areas of application

- corridors/hallways

Technical data

Voltage:	110 – 240 V AC 50 / 60 Hz
Dimensions:	**Ø 200 x 90 mm (92199)**
Power consumption:	approx. 0.5 W
Detection area:	horizontal 360° (Ceiling mounting)
Range:	max. Ø 40 m across max. Ø 20 m towards
Monitored area (tangential movement):	250 m² / 2.5 m mounting height
Mounting height min./max./recommended:	2.4 m / 2.6 m / 2.5 m
Degree / class of protection:	IP20 / Class II
Impact strength:	**IK09 (92199)**
Ambient temperature:	-25 °C to +50 °C
Housing:	**polycarbonate, UV-resistant + coated steel basket (92199)**
Material color:	white mat, similar to RAL9010
Channel 1 (lighting control, potential-free (dry))	
Switching power:	2300 W, cos φ = 1 1150 VA, cos φ = 0.5 800 W LED max. inrush current Ip (20 ms) = 165 A max. inrush current Ip (200 µs) = 800 A
Type of contact (k):	1x µ-contact, dry NO contact with tungsten pre-make contact
Follow-up time:	15 sec – 30 min, Pulse
Switch-on threshold:	10 – 2000 Lux
Light measuring:	Mixed light measuring

Product information

Set : PD4-M-1C-C-FC + Wire basket BSK (Ø 200 x 90 mm) white

Occupancy detector designed for corridors

One potential-free (dry) switching contact

Version as master device

Detection area can be extended by using slave devices

Manual switching via push-button possible

Additional functions can be set up using the optional remote control.

Factory settings 10 min and 500 lux

There are markings to ensure correct alignment during installation

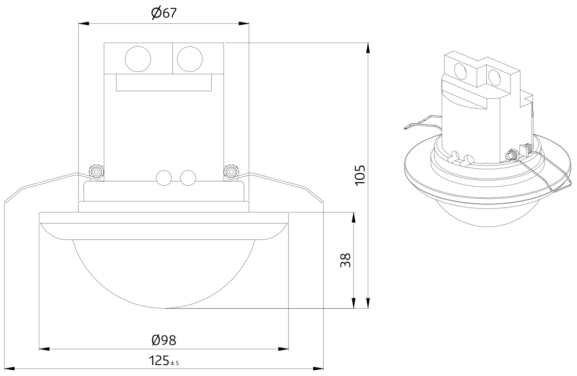
Ø67
105
38
Ø98
125±1

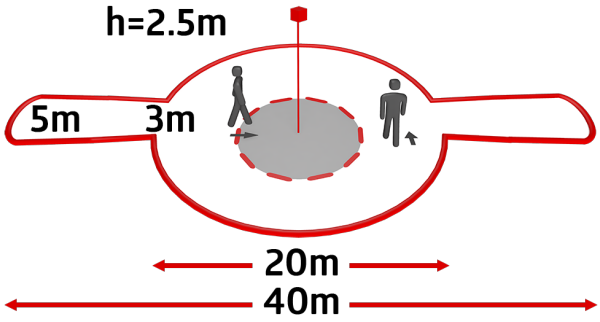
h=2.5m
5m
3m
20m
40m

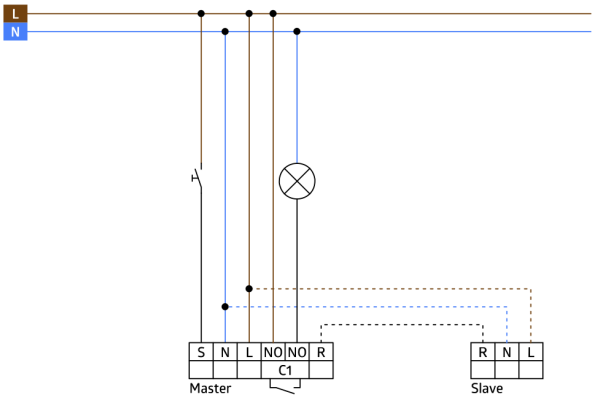
L
N
S
N
L
NO
NO
R
C1
Master
R
N
L
Slave

Set items

To receive the bundle according to the technical specification, please order the items listed.



PD4-M-1C-C-FC
Art.No: 92586

Voltage: 110 – 240 V AC 50 / 60 Hz
Dimensions: Ø 97 x 103 mm
Power consumption: approx. 0.5 W

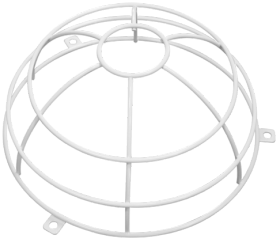

Wire basket BSK (Ø 200 x 90 mm)
Art.No: 92199

Dimensions: Ø 200 x 90 mm
Impact strength: IK09
Housing: coated steel basket