B.E.G. LUXOMAT®



PD4-M-1C-C-FC

92586 EAN: 4007529925865

230V PIR motion sensor with 360° coverage and a detection area of up to 40x5m (250 m²), suitable for hallways and remote-controlled

Order data

Designation	Colour	Art.No
PD4-M-1C-C-FC	white	92586

Areas of application

- corridors/hallways

Accessories

Designation	Colour	Art.No
RC-Arc extinction kit	white	10880
Mini-RC-Arc extinction kit		10882
BLE-IR-Adapter	black	93067
IR-PD-1C	-	92520
IR-PD-1C-E	-	92077
IR-PD-Mini	-	92159
Wire basket BSK (Ø 200 x 90 mm)	white	92199
Square design frame PD4-FC	pure white	92992
Blinds PD4	transparent	92313

Technical data

Voltage:	110 – 240 V AC 50 / 60 Hz
Dimensions:	Ø 97 x 103 mm
Power consumption:	approx. 0.5 W
Detection area:	horizontal 360° (Ceiling mounting)
Range:	max. Ø 40 m across max. Ø 20 m towards
Monitored area (tangential movement):	250 m² / 2.5 m mounting height
Mounting height min./max./recommended:	2.4 m / 2.6 m / 2.5 m
Degree / class of protection:	IP20 / Class II
Impact strength:	IK04
Ambient temperature:	-25 °C to +50 °C
Housing:	polycarbonate, UV-resistant
Material color:	white mat, similar to RAL9010
Channel 1 (lighting control, potential-free (dry))	
Switching power:	2300 W, cos φ = 1 1150 VA, cos φ = 0.5 800 W LED max. inrush current Ip (20 ms) = 165 A max. inrush current Ip (200 µs) = 800 A
Type of contact (k):	1x µ-contact, dry NO contact with tungsten pre-make contact
Follow-up time:	15 sec – 30 min, Pulse
Switch-on threshold:	10 – 2000 Lux
Light measuring:	Mixed light measuring

Product information

Occupancy detector designed for corridors

One potential-free (dry) switching contact

Version as master device

Detection area can be extended by using slave devices

Manual switching via push-button possible

Additional functions can be set up using the optional remote control.

Factory settings 10 min and 500 lux

There are markings to ensure correct alignment during installation

Application examples:
corridors/hallways

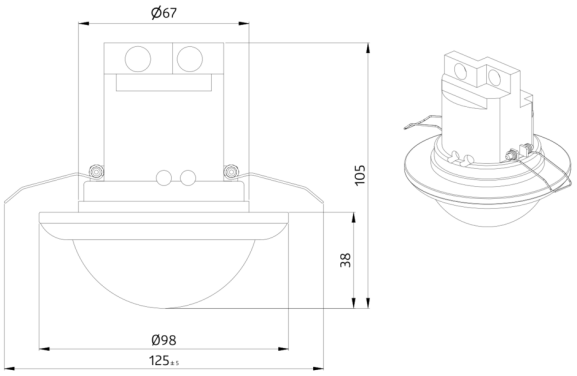
Ø67
105
38
Ø98
125±1

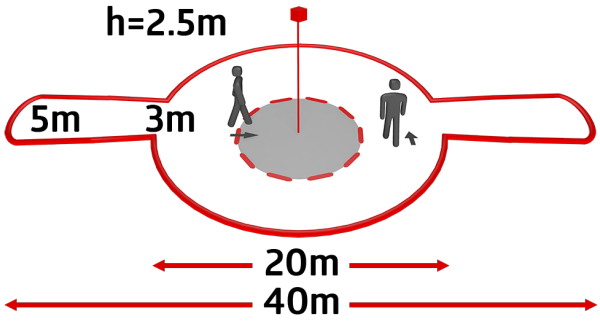
h=2.5m
5m
3m
20m
40m

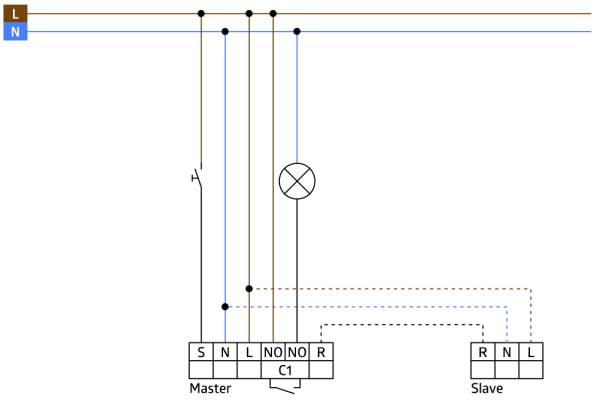
L
N
S
N
L
NO
NO
R
C1
Master
R
N
L
Slave

Accessories



RC-Arc extinction kit
Art.No: 10880

Voltage: 230 V AC ±10%
Dimensions: 38 x 12 x 26 mm
Degree / class of protection: IP20 / Class II



Mini-RC-Arc extinction kit
Art.No: 10882

Voltage: 230 V AC ±10%
Dimensions: 50 x 23 x 8 mm
Degree / class of protection: IP20 / Class II



BLE-IR-Adapter
Art.No: 93067

Dimensions: 40 x 55 x 103 mm
Material color: black
Frequency: 2.4 GHz ISM band, GFSK 0.2 dBm + 5.3 dBi = 5.5 dBm

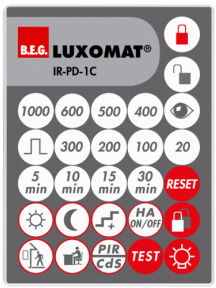

IR-PD-1C
Art.No: 92520

Battery: 3.0 V Lithium CR2032 (inclusive)
Dimensions: 80 x 60 x 8 mm
Material color: -

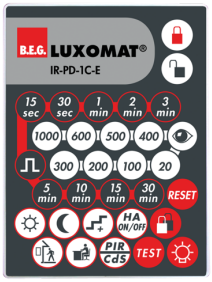

IR-PD-1C-E
Art.No: 92077

Battery: 3.0 V Lithium CR2032 (inclusive)
Dimensions: 80 x 60 x 8 mm
Material color: -



IR-PD-Mini
Art.No: 92159

Battery: 3.0 V Lithium CR2032 (inclusive)
Dimensions: 57 x 35 x 7 mm
Material color: -

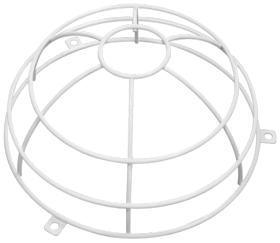

Wire basket BSK (Ø 200 x 90 mm)
Art.No: 92199

Dimensions: Ø 200 x 90 mm
Impact strength: IK09
Housing: coated steel basket



Square design frame PD4-FC
Art.No: 92992

Dimensions: 101 x 101 x 11.8 mm
Housing: polycarbonate, UV-resistant
Material color: pure white mat, similar to RAL9010



Blinds PD4
Art.No: 92313

Housing: Housing UV- and shockresistant Polycarbonate
Material color: transparent