B.E.G. LUXOMAT® net



PD4-KNXs-GH-DX-SM

93518 EAN: 4007529935185

KNX PIR motion detector (Deluxe) with 360° coverage and a detection area of up to 30 x 19 m (440 m²) at a mounting height of 16 m, for high-bay warehouses

Order data

Designation	Colour	Art.No
PD4-KNXs-GH-DX-SM	white	93518

Accessories

Designation	Colour	Art.No
BLE-IR-Adapter	black	93067
IR-Adapter for Smartphones	black	92726
IR-PD-KNX	-	92123
IR-PD-KNX-Mini	-	93398
Wire basket BSK (Ø 200 x 90 mm)	white	92199
Blinds PD4	transparent	92313
Pendulum mounting set PD2/3/4 SM	jet black	93193
Pendulum mounting set PD2/3/4 SM	white	93179

Technical data

Voltage:	via KNX BUS
Dimensions:	Ø 101 x 76 mm
Typ. power input:	12 mA
Detection area:	horizontal 360° oval (Ceiling mounting)
Range:	30 m x 19 m
Monitored area (tangential movement):	440 m² / 14 m mounting height
Mounting height min./max./recommended:	5 m / 16 m / 14 m
Degree / class of protection:	IP54 / Class III
Impact strength:	IK04
Ambient temperature:	-25 °C to +55 °C
Temperature measurement range:	-5 °C to +45 °C
Housing:	polycarbonate, UV-resistant
Material color:	white mat, similar to RAL9010
Number of light sensors:	1
Number of PIR sensors:	3
KNX TP 256:	Yes
KNX Secure:	Yes
Orientation light:	5 – 100 % / OFF / 1 min – 255 min
Night light:	5 – 100 %
Brightness set value:	5 – 2000 Lux

Product information

KNX occupancy detector designed for high-bay warehouses, with integrated KNX bus connector

KNX Secure ready

HCL/RGB control

Parameterisation from ETS 5 for integration into KNX systems

Individual adaption of detection sensitivity for each PIR sensor

PIR sensors can be deactivated individually

Direction of movement can be identified

External telescopic light sensor for a mounting height between 5 and 16 m (mechanically adjustable) for measuring the light according to the application.

Mixed light measurement with internal and external light sensor

Intelligent semi-automatic mode, occupancy-independent regulating mode (photoelectric switch), full automatic mode

1 x Light (for regulating or switching), 1 x slave output, 3 separate HVAC-blocs

Regulation of up to three lighting groups using offset (external influence possible)

Short presence, self-adjusting follow-up time, corridor function

Various locking functions

Soft-start

Two logic modules

Recall of light scenes

Deactivatable status indicators

The product database for import into the ETS database can be downloaded from the B.E.G. homepage.

Detection area can be extended thanks to master-slave-mode

Extensive optimization options for light measurement

Measured light value is communicated to the bus

Adaption of dimming curve

Bidirectionally remote control-capable with the IR adapter and the B.E.G. smartphone app

PIN code

IR remote control-capable via IR remote control (optionally)

5 button remote control, programmable at choice (accessory)

Programming button (phys. address) can be operated via remote control

HVAC mode (0=automatic, 1=comfort, 2=stand-by, 3=economy, 4=antifreeze/heat protection)

Manual influence via external KNX push buttons possible

Function control (heartbeat, cyclical sending)

Occupancy simulation

Forced switch-off

Intelligent central-off function

Premonition of switch-off

Burn-in function for fluorescent lamps selectable from 1h till 100h

Behaviour upon bus voltage return definable at choice

Variable safety pause after switching off the lights

For further information
https://www.beg-luxomat.com/en-au/solutions/areas-of-application/great-mounting-heights/

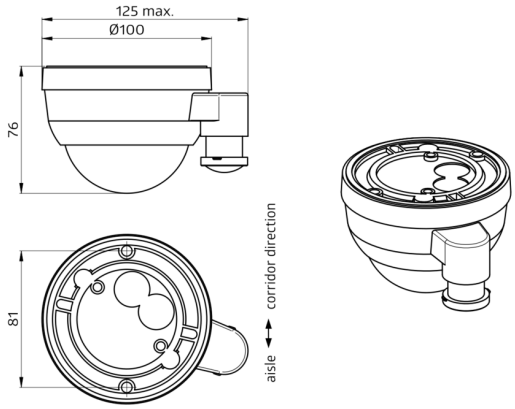
125 max.
Ø100
76
81
corridor direction
aisle

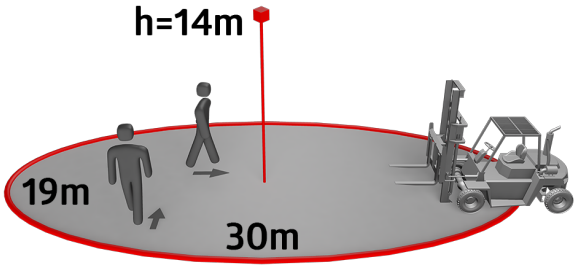
h=14m
19m
30m

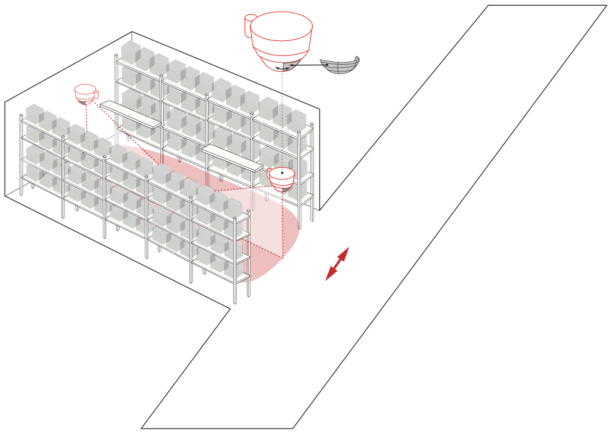

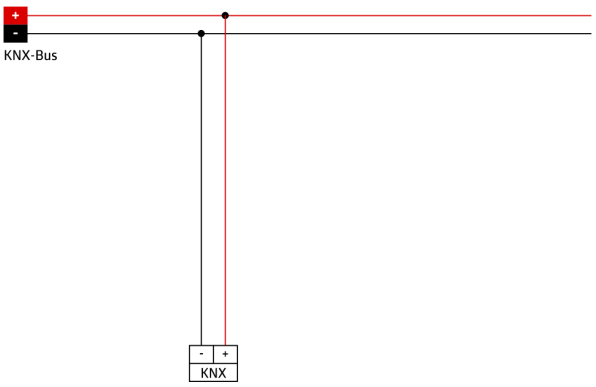
+
-
KNX-Bus
-
+
KNX

Accessories



BLE-IR-Adapter
Art.No: 93067

Dimensions: 40 x 55 x 103 mm
Material color: black
Frequency: 2.4 GHz ISM band, GFSK 0.2 dBm + 5.3 dBi = 5.5 dBm



IR-Adapter for Smartphones
Art.No: 92726

Dimensions: 47 x 19 x 10 mm
Degree / class of protection: IP20
Ambient temperature: -20 °C to +40 °C



IR-PD-KNX
Art.No: 92123

Battery: 3.0 V Lithium CR2032 (inclusive)
Dimensions: 80 x 60 x 8 mm
Material color: -



IR-PD-KNX-Mini
Art.No: 93398

Battery: 3.0 V Lithium CR2032 (inclusive)
Dimensions: 57 x 35 x 7 mm
Material color: -

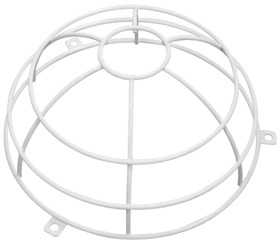

Wire basket BSK (Ø 200 x 90 mm)
Art.No: 92199

Dimensions: Ø 200 x 90 mm
Impact strength: IK09
Housing: coated steel basket



Blinds PD4
Art.No: 92313

Housing: Housing UV- and shockresistant Polycarbonate
Material color: transparent



Pendulum mounting set PD2/3/4 SM
Art.No: 93193

Dimensions: 1 : Ø 113 x 79 mm, 2 : Ø 113 x 34 mm
Housing: polycarbonate, UV-resistant
Material color: jet black, similar to RAL9005



Pendulum mounting set PD2/3/4 SM
Art.No: 93179

Dimensions: 1 : Ø 113 x 79 mm, 2 : Ø 113 x 34 mm
Housing: polycarbonate, UV-resistant
Material color: white, similar to RAL9010