B.E.G. LUXOMAT® net



PD4-DALI-SYS-GH-SM

93345 EAN: 4007529933457

DALI-SYS PIR motion sensor with 360° coverage and a detection area of up to 30 x 19 m (440 m²) at a mounting height of 16 m, designed for high-bay warehouses and integration into DALI-SYS systems

Order data

Designation	Colour	Art.No
PD4-DALI-SYS-GH-SM	white	93345

Accessories

Designation	Colour	Art.No
IR-PD-DALI-Mini	-	92112
Wire basket BSK (Ø 200 x 90 mm)	white	92199
Blinds PD4	transparent	92313
Pendulum mounting set PD2/3/4 SM	white	93179
Pendulum mounting set PD2/3/4 SM	jet black	93193

Technical data

Voltage:	via DALI Bus, max. 22.5 V DC
Dimensions:	Ø 101 x 76 mm
Settings:	B.E.G. PC Tools, B.E.G. DALI-SYS router
Typ. power input:	7 mA
Detection area:	horizontal 360° oval (Ceiling mounting)
Range:	30 m x 19 m
Monitored area (tangential movement):	440 m² / 14 m mounting height
Mounting height min./max./recommended:	5 m / 16 m / 14 m
Degree / class of protection:	IP54 / Class II
Impact strength:	IK04
Ambient temperature:	-25 °C to +50 °C
Housing:	polycarbonate, UV-resistant
Material color:	white mat, similar to RAL9010
Follow-up time:	1 sec – 120 min
Orientation light:	5 – 100 % / 1 min – 120 min / ∞
Brightness set value:	10 – 2500 Lux

Product information

DALI multisensor for surface mounting in large mounting heights

Powered via DALI bus

External telescopic light sensor for a mounting height between 5 and 16 m (mechanically adjustable) for measuring the light according to the application.

Seemless integration in B.E.G. LUXOMAT®net DALI-SYS

Bright LED indication for commissioning

Detection area can be extended thanks to master-slave-mode

Integrated daylight harvesting circuit (or switch output)

Guided Light, Soft-Start PLUS, Orientation light PLUS

Works out-of-the box for easy installation check

Full range of functions can only be activated with other products of the product group B.E.G. LUXOMAT®net DALI-SYS

There are markings to ensure correct alignment during installation

When used in high-bay warehouses, care should be taken that, in the cross-aisles of the warehouse, detectors are installed that can detect movement only in the desired aisle locations, by using blinds or other technical arrangements.

For further information
https://www.beg-luxomat.com/en-au/solutions/areas-of-application/great-mounting-heights/

This article is a component of a lighting control system from B.E.G., which supports the use of DALI control gear (luminaires, relays) from other manufacturers

The use of DALI application controllers from other manufacturers is not supported

The use of DALI input devices (sensors, push-buttons) from other manufacturers is not supported

Additional system components (hardware) from B.E.G. are required

Additional services (planning, commissioning and maintenance) from B.E.G. are required

Application examples:
high-bay warehouse

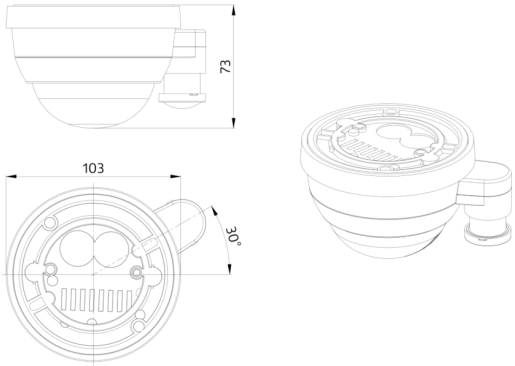
73
103
30°

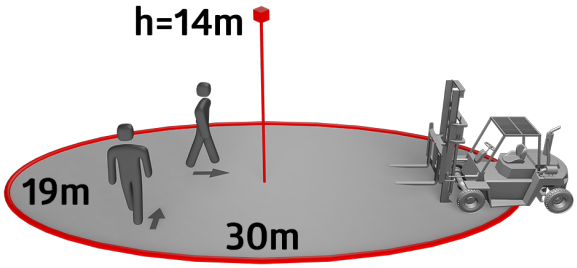
h=14m
19m
30m

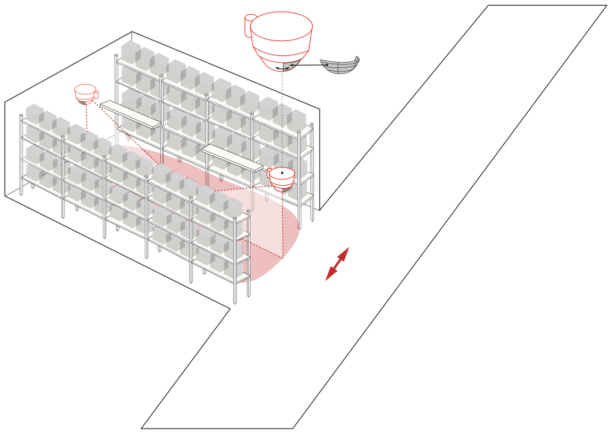

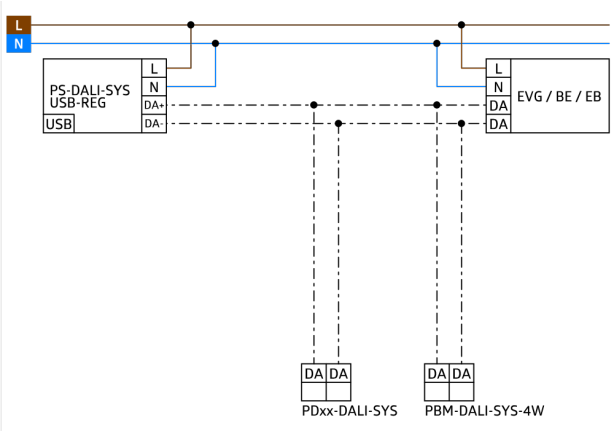
L
N
PS-DALI-SYS
USB-REG
USB
L
N
DA+
DA-
L
N
DA
DA
EVG / BE / EB
DA DA
PDxx-DALI-SYS
DA DA
PBM-DALI-SYS-4W

Accessories



IR-PD-DALI-Mini
Art.No: 92112

Battery: 3.0 V Lithium CR2032 (inclusive)
Dimensions: 57 x 35 x 7 mm
Material color: -

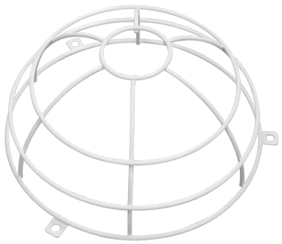

Wire basket BSK (Ø 200 x 90 mm)
Art.No: 92199

Dimensions: Ø 200 x 90 mm
Impact strength: IK09
Housing: coated steel basket



Blinds PD4
Art.No: 92313

Housing: Housing UV- and shockresistant Polycarbonate
Material color: transparent



Pendulum mounting set PD2/3/4 SM
Art.No: 93179

Dimensions: 1 : Ø 113 x 79 mm, 2 : Ø 113 x 34 mm
Housing: polycarbonate, UV-resistant
Material color: white, similar to RAL9010



Pendulum mounting set PD2/3/4 SM
Art.No: 93193

Dimensions: 1 : Ø 113 x 79 mm, 2 : Ø 113 x 34 mm
Housing: polycarbonate, UV-resistant
Material color: jet black, similar to RAL9005