B.E.G. LUXOMAT® net



PD4-CAS2-GH DALI-2

93478 EAN: 4007529934782

CASAMBI-compatible PIR motion detector with integrated DALI-2 bus power supply, 360° coverage, and a detection area of up to 30 x 19 m (440 m²) at a mounting height of 16 m, for high-bay warehouses

Order data

Designation	Colour	Art.No
PD4-CAS2-GH DALI-2	white	93478

Accessories

Designation	Colour	Art.No
Wire basket BSK (Ø 200 x 90 mm)	white	92199
Blinds PD4	transparent	92313
Pendulum mounting set PD2/3/4 SM	jet black	93193
Pendulum mounting set PD2/3/4 SM	white	93179

Technical data

Voltage:	230 V AC ±10% 50 Hz
Dimensions:	Ø 101 x 76 mm
Settings:	Casambi App
Power consumption:	0.4 W
Detection area:	horizontal 360° oval (Ceiling mounting)
Range:	30 m x 19 m
Monitored area (tangential movement):	440 m² / 14 m mounting height
Mounting height min./max./recommended:	5 m / 16 m / 14 m
Degree / class of protection:	IP54 / Class II
Impact strength:	IK04
Ambient temperature:	-5 °C to +45 °C
Housing:	polycarbonate, UV-resistant
Material color:	white mat, similar to RAL9010
Channel 1 (lighting control)	
DALI output:	80 mA (guaranteed), 125 mA (max.), shut down mechanism
Supported control gear:	DT0, DT5, DT6, DT7, DT8
Supported control devices:	- (single master)
Follow-up time:	1 sec – 60 min
Brightness set value:	1 – 4000 Lux
Light measuring:	Mixed light measuring

Product information

Casambi occupancy detector for surface mounting in large mounting heights

Integrated DALI power supply

DALI-2 interface for controlling digital dimmable ECGs in broadcast mode

DALI-2 certified product

Integrated temperature monitoring and short-circuit detection

Bright LED indication for commissioning

External telescopic light sensor for a mounting height between 5 and 16 m (mechanically adjustable) for measuring the light according to the application.

Mixed light measurement with external light sensor

Adjustment of the reflection factor and input of the luminosity for the display of the actual luminosity in the app

Extension of the detection area with additional B.E.G. Casambi devices possible

Individual adaption of detection sensitivity for each PIR sensor

Detection area can be restricted with blinds

There are markings to ensure correct alignment during installation

When used in high-bay warehouses, care should be taken that, in the cross-aisles of the warehouse, detectors are installed that can detect movement only in the desired aisle locations, by using blinds or other technical arrangements.

Manual switching and dimming via push button possible

Functions adjustable via Casambi app

For further information
https://www.beg-luxomat.com/en-au/solutions/areas-of-application/great-mounting-heights/

Application examples:
high-bay warehouse, sports halls/ storage rooms

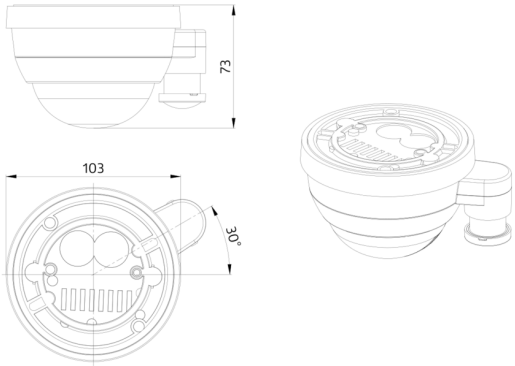

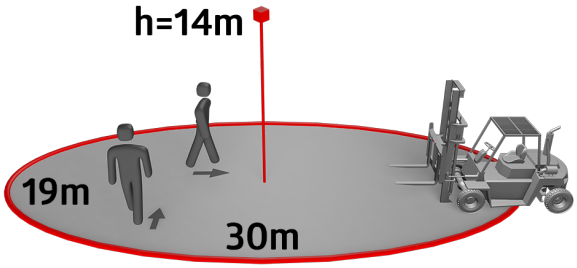

CASAMBI

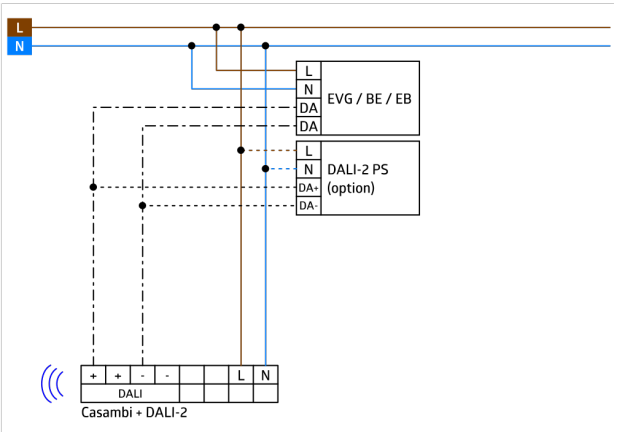
L
N
L
N
DA
DA
EVG / BE / EB
L
N
DA+
DA-
DALI-2 PS
(option)
+
+
-
-
L
N
DALI
Casambi + DALI-2

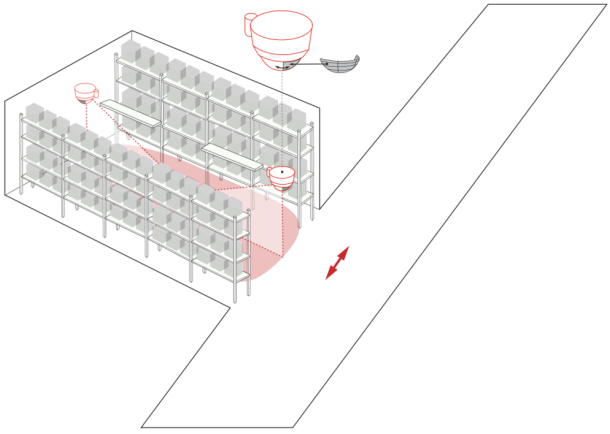

Accessories

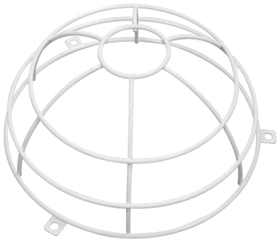

Wire basket BSK (Ø 200 x 90 mm)
Art.No: 92199

Dimensions: Ø 200 x 90 mm
Impact strength: IK09
Housing: coated steel basket



Blinds PD4
Art.No: 92313

Housing: Housing UV- and shockresistant Polycarbonate
Material color: transparent



Pendulum mounting set PD2/3/4 SM
Art.No: 93193

Dimensions: 1 : Ø 113 x 79 mm, 2 : Ø 113 x 34 mm
Housing: polycarbonate, UV-resistant
Material color: jet black, similar to RAL9005



Pendulum mounting set PD2/3/4 SM
Art.No: 93179

Dimensions: 1 : Ø 113 x 79 mm, 2 : Ø 113 x 34 mm
Housing: polycarbonate, UV-resistant
Material color: white, similar to RAL9010