B.E.G. LUXOMAT® net



PD4-BMS-GH-SM DALI-2

93545 EAN: 4007529935451

DALI-2 (BMS) PIR motion detector with 360° coverage and a detection area of up to 30 x 19 m (440 m²) at a mounting height of 16 m, for high-bay warehouses, DALI-2 input device

Order data

Designation	Colour	Art.No
PD4-BMS-GH-SM DALI-2	white	93545

Accessories

Designation	Colour	Art.No
Wire basket BSK (Ø 200 x 90 mm)	white	92199
Blinds PD4	transparent	92313
Pendulum mounting set PD2/3/4 SM	white	93179
Pendulum mounting set PD2/3/4 SM	jet black	93193

Technical data

Voltage:	via DALI Bus, max. 22.5 V DC
Dimensions:	Ø 101 x 76 mm
Settings:	via DALI-Bus and application which supports DALI multisensors according to IEC62386, parts 101, 103, 303 and 304
Typ. power input:	7 mA
Settling time:	200 ms
Detection area:	horizontal 360° oval (Ceiling mounting)
Range:	30 m x 19 m
Monitored area (tangential movement):	440 m² / 14 m mounting height
Mounting height min./max./recommended:	5 m / 16 m / 14 m
Degree / class of protection:	IP54 / Class II
Impact strength:	IK04
Measured light output:	0 - 4095 Lux, Mixed light measuring
Ambient temperature:	-25 °C to +50 °C
Housing:	polycarbonate, UV-resistant
Material color:	white mat, similar to RAL9010

Product information

DALI-2 multisensor (input device) for surface mounting in large mounting heights

DALI-2 certified product

Powered via DALI bus

External telescopic light sensor for a mounting height between 5 and 16 m (mechanically adjustable) for measuring the light according to the application.

Bright LED indication for commissioning

DALI multimaster technology according to IEC 62386 part 103

Instance 0 provides information regarding occupancy and movement for the DALI-Bus according to IEC 62386 part 303

Instance 1 provides LUX values for the DALI-Bus according to IEC 62386 part 304

Parameterisation is possible via mandatory Multimaster-Application-Controller of any manufacturer. This controller must support IEC 62386 parts 101/103/303/304.

Mixed light measurement with external light sensor

Detection area can be restricted with blinds

There are markings to ensure correct alignment during installation

When used in high-bay warehouses, care should be taken that, in the cross-aisles of the warehouse, detectors are installed that can detect movement only in the desired aisle locations, by using blinds or other technical arrangements.

Individual adaption of detection sensitivity for each PIR sensor

Status LEDs can be activated / deactivated

For further information
https://www.beg-luxomat.com/en-au/solutions/areas-of-application/great-mounting-heights/

Application examples:
high-bay warehouse

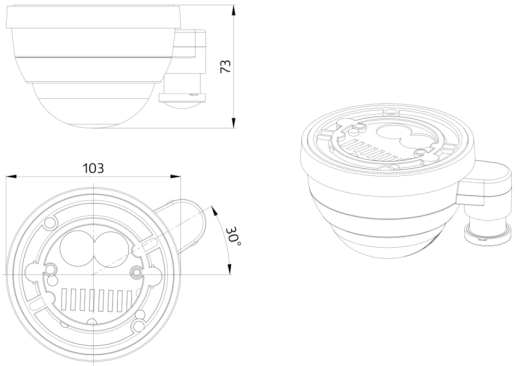
73
103
30°

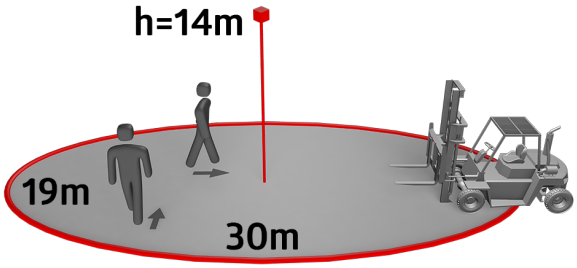
h=14m
19m
30m

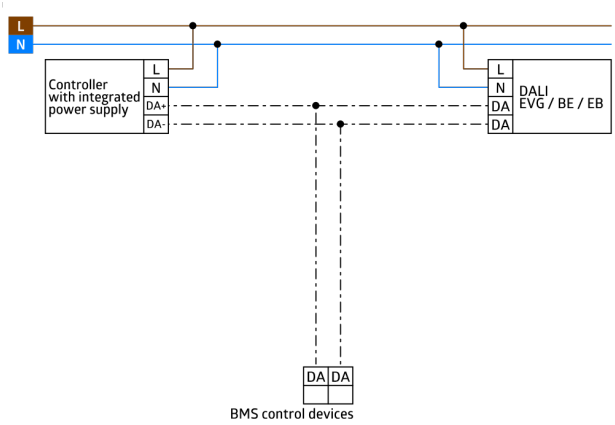
L
N
Controller
with integrated
power supply
L
N
DA+
DA-
L
N
DA
DA
DALI
EVG / BE / EB
DA
DA
BMS control devices

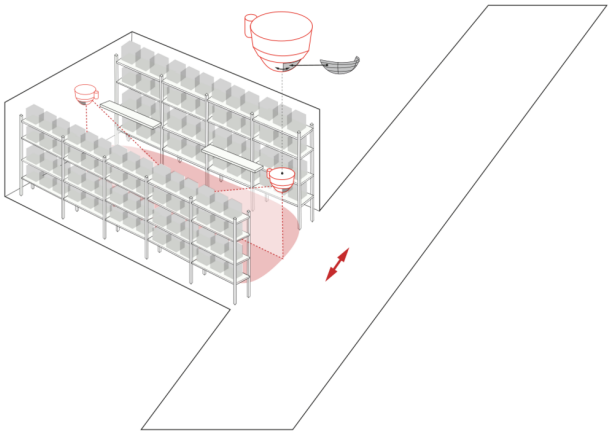

Accessories

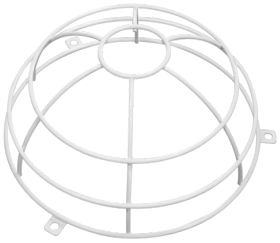

Wire basket BSK (Ø 200 x 90 mm)
Art.No: 92199

Dimensions: Ø 200 x 90 mm
Impact strength: IK09
Housing: coated steel basket



Blinds PD4
Art.No: 92313

Housing: Housing UV- and shockresistant Polycarbonate
Material color: transparent



Pendulum mounting set PD2/3/4 SM
Art.No: 93179

Dimensions: 1 : Ø 113 x 79 mm, 2 : Ø 113 x 34 mm
Housing: polycarbonate, UV-resistant
Material color: white, similar to RAL9010



Pendulum mounting set PD2/3/4 SM
Art.No: 93193

Dimensions: 1 : Ø 113 x 79 mm, 2 : Ø 113 x 34 mm
Housing: polycarbonate, UV-resistant
Material color: jet black, similar to RAL9005