B.E.G. LUXOMAT®



PD3N-2C-FM Set 92188-92199

230V 2-channel PIR motion detector with 360° coverage and a range of up to Ø10m (78 m²), remote-controlled

Order data

Designation	Colour	Art.No
PD3N-2C-FM	white	92188
Wire basket BSK (Ø 200 x 90 mm)	white	92199

Areas of application

- toilets
- equipment rooms
- corridors/hallways
- staircases

Technical data

Voltage:	110 – 240 V AC 50 / 60 Hz
Dimensions:	**Ø 200 x 90 mm (92199)**
Power consumption:	approx. 0.5 W
Detection area:	horizontal 360° (Ceiling mounting)
Range:	max. Ø 10 m across max. Ø 6 m towards max. Ø 4 m seated
Monitored area (tangential movement):	78 m² / 2.5 m mounting height
Mounting height min./max./recommended:	2 m / 5 m / 2.5 m
Degree / class of protection:	IP20 / Class II
Impact strength:	**IK09 (92199)**
Ambient temperature:	-25 °C to +50 °C
Housing:	**polycarbonate, UV-resistant + coated steel basket (92199)**
Material color:	white mat, similar to RAL9010
Channel 1 (lighting control)	
Switching power:	2300 W, cos φ = 1 1150 VA, cos φ = 0.5 800 W LED max. inrush current Ip (20 ms) = 165 A max. inrush current Ip (200 µs) = 800 A
Type of contact (k):	1x µ-contact, NO contact with tungsten pre-make contact
Follow-up time:	30 sec – 30 min, Pulse
Switch-on threshold:	10 – 2000 Lux
Channel 2 (HVAC control potential-free (dry))	
Switching power:	3 A (230 V), cos φ = 1
Type of contact:	1x NO contact (dry)
Follow-up time:	5 min – 120 min

Product information

Set : PD3N-2C-FM + Wire basket BSK (Ø 200 x 90 mm) white

Remote control-capable ceiling motion detector

One channel for light switching

Zero crossing switching

One additional potential-free (dry) contact for HVAC

Additional functions can be set up using the optional remote control.

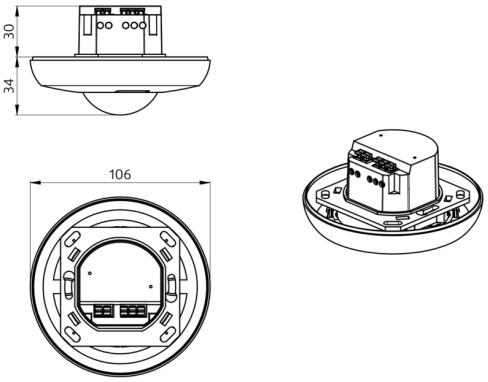
30
34
106

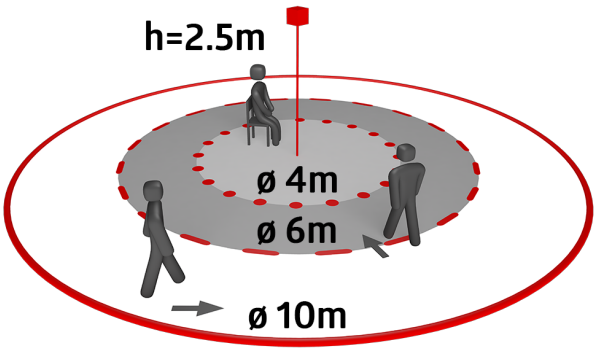
h=2.5m
ø 4m
ø 6m
ø 10m

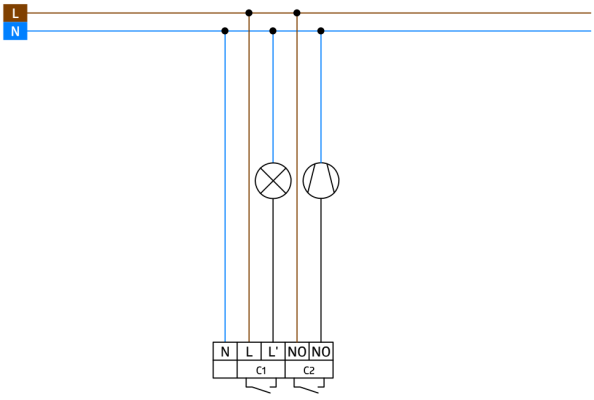
L
N
N
L
L'
NO
NO
C1
C2

Set items

To receive the bundle according to the technical specification, please order the items listed.



PD3N-2C-FM
Art.No: 92188

Voltage: 110 – 240 V AC 50 / 60 Hz
Dimensions: Ø 106 x 63 mm
Power consumption: approx. 0.5 W

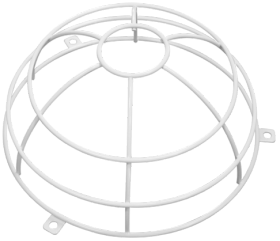

Wire basket BSK (Ø 200 x 90 mm)
Art.No: 92199

Dimensions: Ø 200 x 90 mm
Impact strength: IK09
Housing: coated steel basket