B.E.G. LUXOMAT®



PD3N-1C-NO-PF-FC Set 92576-92991

230V PIR motion detector with 360° detection and a range of up to Ø10m (78 m²), remote-controlled and equipped with a dry contact

Order data

Designation	Colour	Art.No
PD3N-1C-NO-PF-FC	white	92576
Square design frame PD3N-FC	white	92991

Areas of application

- underground car parks
- entrance halls
- corridors/hallways
- toilets
- equipment rooms
- small offices
- open-plan offices
- conference rooms

Technical data

Voltage:	110 – 240 V AC 50 / 60 Hz
Dimensions:	Ø 83 x 81 mm
Power consumption:	approx. 0.4 W
Detection area:	horizontal 360° (Ceiling mounting)
Range:	max. Ø 10 m across max. Ø 6 m towards max. Ø 4 m seated
Monitored area (tangential movement):	78 m² / 2.5 m mounting height
Mounting height min./max./recommended:	2 m / 5 m / 2.5 m
Degree / class of protection:	IP23 / Class II
Impact strength:	IK04
Ambient temperature:	-25 °C to +50 °C
Housing:	polycarbonate, UV-resistant
Material color:	white mat, similar to RAL9010
Channel 1 (lighting control, potential-free (dry))	
Switching power:	2300 W, cos φ = 1 1150 VA, cos φ = 0.5 800 W LED max. inrush current Ip (20 ms) = 165 A max. inrush current Ip (200 µs) = 800 A
Type of contact (k):	1x µ-contact, dry NO contact with tungsten pre-make contact
Follow-up time:	15 sec – 30 min, Pulse
Switch-on threshold:	10 – 2000 Lux

Product information

Set : PD3N-1C-NO-PF-FC + Square design frame PD3N-FC white mat, similar to RAL9010

Remote control-capable ceiling motion detector

One potential-free (dry) switching contact

Zero crossing switching

Special optical system for detection of even the smallest movements

Additional functions can be set up using the optional remote control.

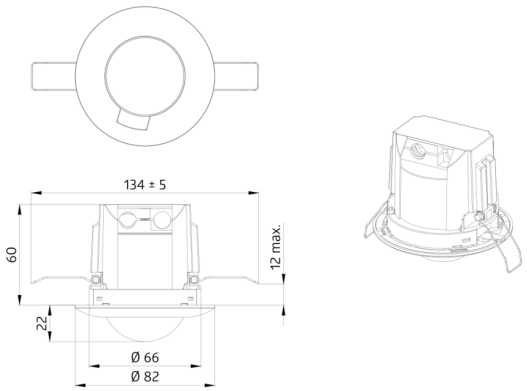
134 ± 5
60
12 max.
22
Ø 66
Ø 82

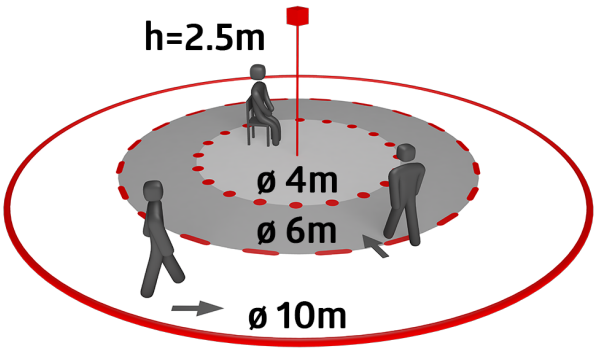
h=2.5m
ø 4m
ø 6m
ø 10m

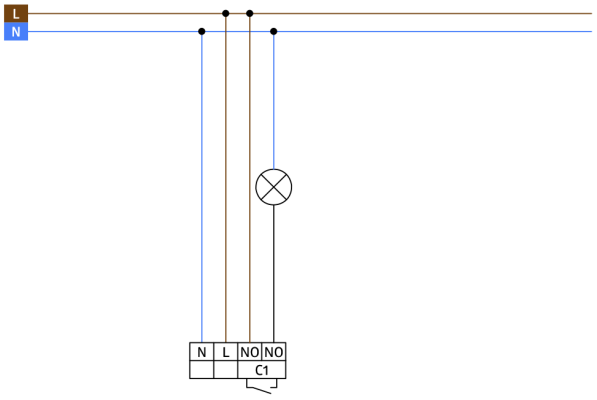
L
N
N
L
NO
NO
C1

Set items

To receive the bundle according to the technical specification, please order the items listed.



PD3N-1C-NO-PF-FC
Art.No: 92576

Voltage: 110 – 240 V AC 50 / 60 Hz
Dimensions: Ø 83 x 81 mm
Power consumption: approx. 0.4 W



Square design frame PD3N-FC
Art.No: 92991

Dimensions: 83 x 83 x 8 mm
Housing: polycarbonate, UV-resistant
Material color: white mat, similar to RAL9010