B.E.G. LUXOMAT®




# PD3N-1C-FM Set
# 92186-92199-93087

230V PIR motion detector with 360° coverage and a range of up to Ø10m (78 m²), remote-controlled

## Order data

| Designation | Colour | Art.No |
|---|---|---|
| PD3N-1C-FM | white | 92186 |
| Wire basket BSK (Ø 200 x 90 mm) | white | 92199 |
| Cover ring PD3N FM | jet black | 93087 |

## Areas of application

- toilets
- equipment rooms
- corridors/hallways
- staircases

## Technical data

| | |
|---|---|
| Voltage: | 110 – 240 V AC 50 / 60 Hz |
| Dimensions: | **Ø 200 x 90 mm (92199)** |
| Power consumption: | approx. 0.5 W |
| Detection area: | horizontal 360° (Ceiling mounting) |
| Range: | max. Ø 10 m across<br>max. Ø 6 m towards<br>max. Ø 4 m seated |
| Monitored area (tangential movement): | 78 m² / 2.5 m mounting height |
| Mounting height min./max./recommended: | 2 m / 5 m / 2.5 m |
| Degree / class of protection: | IP20 / Class II |
| Impact strength: | **IK09 (92199)** |
| Ambient temperature: | -25 °C to +50 °C |
| Housing: | **polycarbonate, UV-resistant + coated steel basket (92199)** |
| Material color: | **jet black mat, similar to RAL9005 (93087)** |
| **Channel 1 (lighting control)** | |
| Switching power: | 2300 W, cos φ = 1<br>1150 VA, cos φ = 0.5<br>800 W LED<br>max. inrush current Ip (20 ms) = 165 A<br>max. inrush current Ip (200 µs) = 800 A |
| Type of contact (k): | 1x µ-contact, NO contact with tungsten pre-make contact |
| Follow-up time: | 15 sec – 30 min, Pulse |
| Switch-on threshold: | 10 – 2000 Lux |

## Product information

Set : PD3N-1C-FM + Wire basket BSK (Ø 200 x 90 mm) white + Cover ring PD3N FM jet black mat, similar to RAL9005

Remote control-capable ceiling motion detector

One channel for light switching

Zero crossing switching

Special optical system for detection of even the smallest movements

Uninterrupted parallel circuit detection of several detectors

Manual switching via push-button possible

Additional functions can be set up using the optional remote control.

Factory settings 10 min and 500 lux

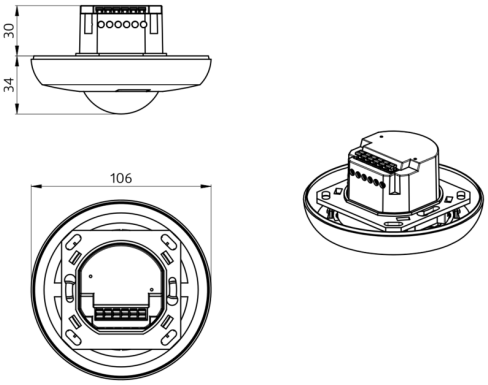
30
34
106

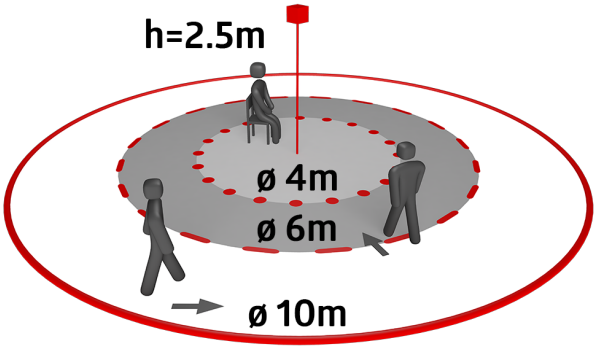
h=2.5m
ø 4m
ø 6m
ø 10m

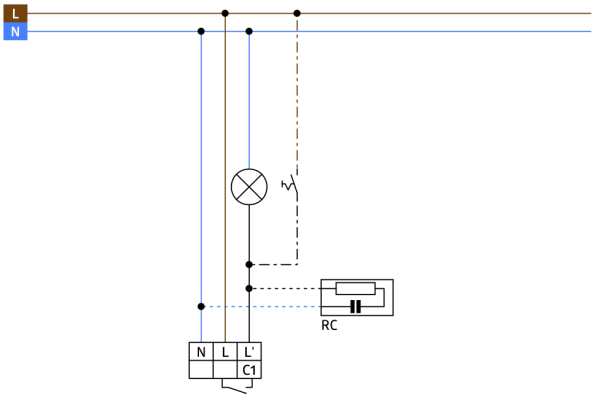
L
N
RC
N
L
L'
C1

## Set items

To receive the bundle according to the technical specification, please order the items listed.



**PD3N-1C-FM**
Art.No: 92186

Voltage: 110 – 240 V AC 50 / 60 Hz
Dimensions: Ø 106 x 63 mm
Power consumption: approx. 0.5 W

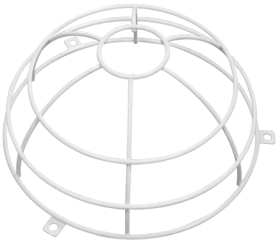

**Wire basket BSK (Ø 200 x 90 mm)**
Art.No: 92199

Dimensions: Ø 200 x 90 mm
Impact strength: IK09
Housing: coated steel basket



**Cover ring PD3N FM**
Art.No: 93087

Dimensions: Ø 106 x 17 mm
Housing: polycarbonate, UV-resistant
Material color: jet black mat, similar to RAL9005