B.E.G. LUXOMAT®



PD3N-1C-FM Set 92186-92199

230V PIR motion detector with 360° coverage and a range of up to Ø10m (78 m²), remote-controlled

Order data

Designation	Colour	Art.No
PD3N-1C-FM	white	92186
Wire basket BSK (Ø 200 x 90 mm)	white	92199

Areas of application

- toilets
- equipment rooms
- corridors/hallways
- staircases

Technical data

Voltage:	110 – 240 V AC 50 / 60 Hz
Dimensions:	**Ø 200 x 90 mm (92199)**
Power consumption:	approx. 0.5 W
Detection area:	horizontal 360° (Ceiling mounting)
Range:	max. Ø 10 m across max. Ø 6 m towards max. Ø 4 m seated
Monitored area (tangential movement):	78 m² / 2.5 m mounting height
Mounting height min./max./recommended:	2 m / 5 m / 2.5 m
Degree / class of protection:	IP20 / Class II
Impact strength:	**IK09 (92199)**
Ambient temperature:	-25 °C to +50 °C
Housing:	**polycarbonate, UV-resistant + coated steel basket (92199)**
Material color:	white mat, similar to RAL9010
Channel 1 (lighting control)	
Switching power:	2300 W, cos φ = 1 1150 VA, cos φ = 0.5 800 W LED max. inrush current Ip (20 ms) = 165 A max. inrush current Ip (200 µs) = 800 A
Type of contact (k):	1x µ-contact, NO contact with tungsten pre-make contact
Follow-up time:	15 sec – 30 min, Pulse
Switch-on threshold:	10 – 2000 Lux

Product information

Set : PD3N-1C-FM + Wire basket BSK (Ø 200 x 90 mm) white

Remote control-capable ceiling motion detector

One channel for light switching

Zero crossing switching

Special optical system for detection of even the smallest movements

Uninterrupted parallel circuit detection of several detectors

Manual switching via push-button possible

Additional functions can be set up using the optional remote control.

Factory settings 10 min and 500 lux

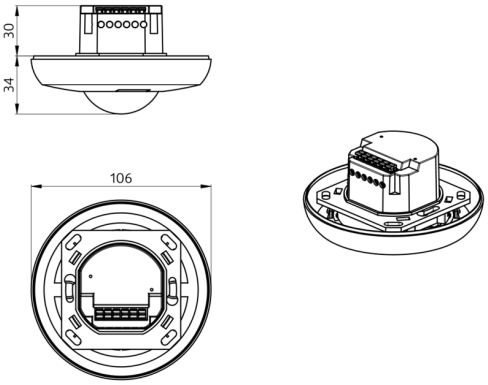
30
34
106

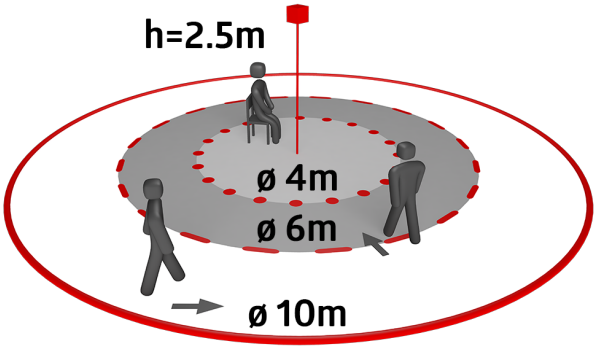
h=2.5m
ø 4m
ø 6m
ø 10m

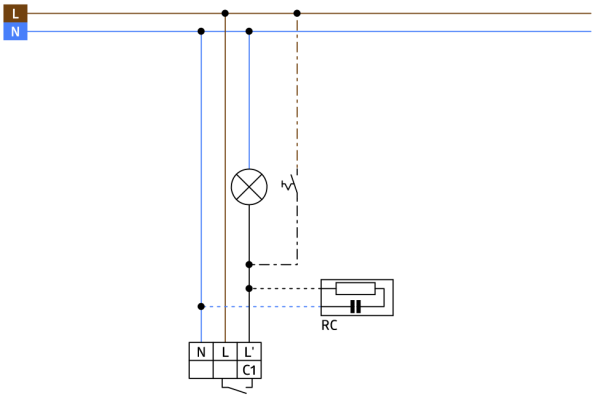
L
N
RC
N
L
L'
C1

Set items

To receive the bundle according to the technical specification, please order the items listed.



PD3N-1C-FM
Art.No: 92186

Voltage: 110 – 240 V AC 50 / 60 Hz
Dimensions: Ø 106 x 63 mm
Power consumption: approx. 0.5 W

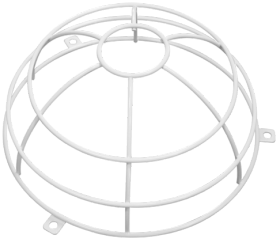

Wire basket BSK (Ø 200 x 90 mm)
Art.No: 92199

Dimensions: Ø 200 x 90 mm
Impact strength: IK09
Housing: coated steel basket