

PD3N-1C-FC Micro Set 92184-92199-93086

230V PIR motion detector with 360° detection and a range of up to Ø10m (78 m²), featuring an acoustic sensor and remote control functionality

Order data

Designation	Colour	Art.No
PD3N-1C-FC Micro	white	92184
Wire basket BSK (Ø 200 x 90 mm)	white	92199
Cover ring PD3N FC	jet black	93086

Areas of application

- toilets
- equipment rooms

Technical data

Voltage:	110 – 240 V AC 50 / 60 Hz
Dimensions:	**Ø 200 x 90 mm (92199)**
Power consumption:	approx. 0.5 W
Detection area:	horizontal 360° (Ceiling mounting)
Range:	max. Ø 10 m across max. Ø 6 m towards max. Ø 4 m seated
Monitored area (tangential movement):	78 m² / 2.5 m mounting height
Mounting height min./max./recommended:	2 m / 5 m / 2.5 m
Degree / class of protection:	IP23 / Class II
Impact strength:	**IK09 (92199)**
Ambient temperature:	-25 °C to +50 °C
Housing:	**polycarbonate, UV-resistant + coated steel basket (92199)**
Material color:	**jet black mat, similar to RAL9005 (93086)**
Channel 1 (lighting control)	
Switching power:	2300 W, cos φ = 1 1150 VA, cos φ = 0.5 800 W LED max. inrush current Ip (20 ms) = 165 A max. inrush current Ip (200 µs) = 800 A
Type of contact (k):	1x µ-contact, NO contact with tungsten pre-make contact
Follow-up time:	30 sec – 30 min, Pulse
Switch-on threshold:	10 – 2000 Lux

Product information

Set : PD3N-1C-FC Micro + Wire basket BSK (Ø 200 x 90 mm) white + Cover ring PD3N FC jet black mat, similar to RAL9005

Remote control-capable ceiling motion detector with integrated acoustic sensor

One channel for light switching

Zero crossing switching

Special optical system for detection of even the smallest movements

Additional functions can be set up using the optional remote control.

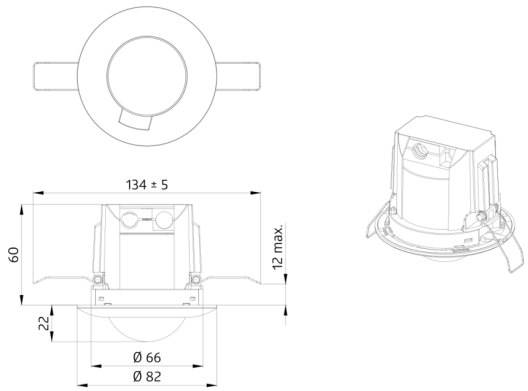
134 ± 5
60
12 max.
22
Ø 66
Ø 82

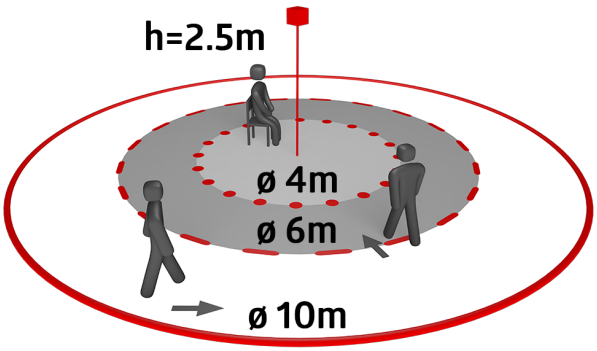
h=2.5m
ø 4m
ø 6m
ø 10m

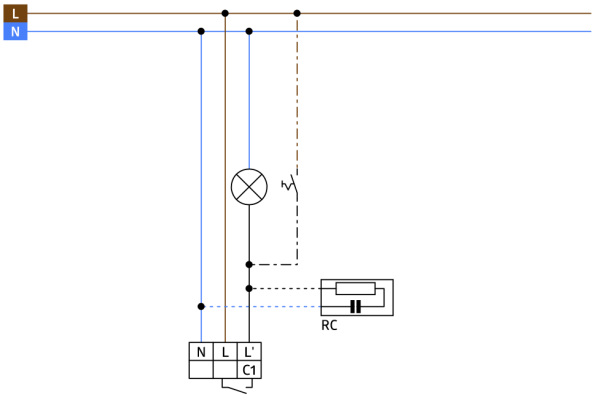
L
N
RC
N
L
L'
C1

Set items

To receive the bundle according to the technical specification, please order the items listed.



PD3N-1C-FC Micro
Art.No: 92184

Voltage: 110 – 240 V AC 50 / 60 Hz
Dimensions: Ø 83 x 81 mm
Power consumption: approx. 0.5 W

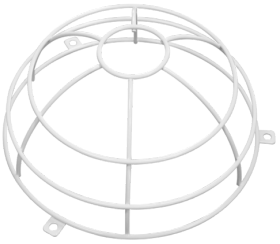

Wire basket BSK (Ø 200 x 90 mm)
Art.No: 92199

Dimensions: Ø 200 x 90 mm
Impact strength: IK09
Housing: coated steel basket



Cover ring PD3N FC
Art.No: 93086

Dimensions: Ø 83 x 6 mm
Housing: polycarbonate, UV-resistant
Material color: jet black mat, similar to RAL9005