B.E.G. LUXOMAT®



PD3-1C-SM

92194 EAN: 4007529921942

230V PIR motion detector with 360° detection and a range of up to Ø10m (78 m²)

Order data

Designation	Colour	Art.No
PD3-1C-SM	white	92194

Accessories

Designation	Colour	Art.No
Pendulum mounting set PD2/3/4 SM	jet black	93193
Pendulum mounting set PD2/3/4 SM	white	93179
Wire basket BSK (Ø 200 x 90 mm)	white	92199

Technical data

Voltage:	110 – 240 V AC 50 / 60 Hz
Dimensions:	Ø 106 x 53 mm
Power consumption:	< 0.3 W
Detection area:	horizontal 360° (Ceiling mounting)
Range:	max. Ø 10 m across max. Ø 6 m towards max. Ø 4 m seated
Monitored area (tangential movement):	78 m² / 2.5 m mounting height
Mounting height min./max./recommended:	2 m / 5 m / 2.5 m
Degree / class of protection:	IP44 / Class II
Ambient temperature:	-25 °C to +50 °C
Housing:	polycarbonate, UV-resistant
Material color:	white mat, similar to RAL9010
Channel 1 (lighting control)	
Switching power:	2000 W, cos φ = 1 1000 VA, cos φ = 0.5 400 W LED, minimum runtime > 5 min max. inrush current Ip (20 ms) = 80 A
Type of contact (k):	µ-contact, NO contact
Follow-up time:	30 sec – 30 min, Pulse
Switch-on threshold:	10 – 2000 Lux

Product information

Ceiling motion detector

One channel for light switching

Zero crossing switching

Switching for all types of light fixtures by high performance relay

Special optical system for detection of even the smallest movements

Serial impulse function

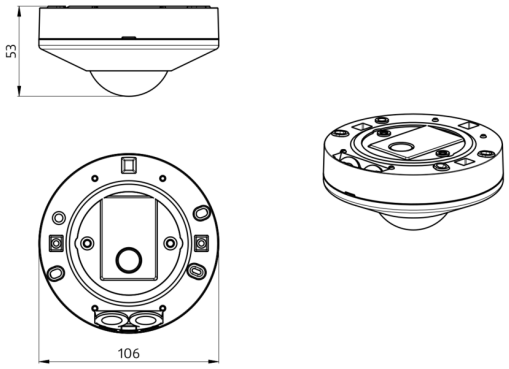
53
106

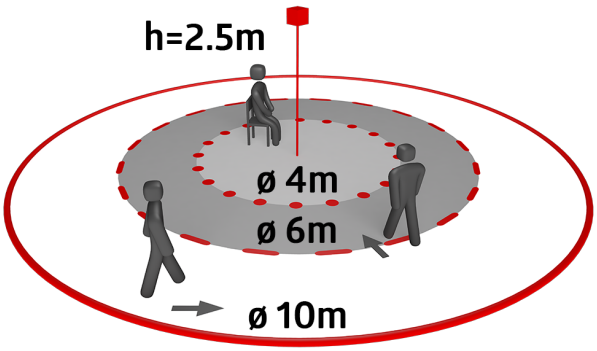
h=2.5m
ø 4m
ø 6m
ø 10m

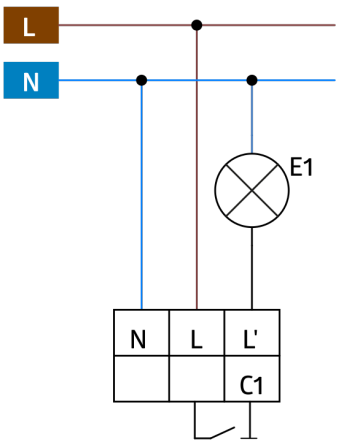
L
N
E1
N
L
L'
C1

Accessories



Pendulum mounting set PD2/3/4 SM
Art.No: 93193

Dimensions: 1 : Ø 113 x 79 mm, 2 : Ø 113 x 34 mm
Housing: polycarbonate, UV-resistant
Material color: jet black, similar to RAL9005



Pendulum mounting set PD2/3/4 SM
Art.No: 93179

Dimensions: 1 : Ø 113 x 79 mm, 2 : Ø 113 x 34 mm
Housing: polycarbonate, UV-resistant
Material color: white, similar to RAL9010

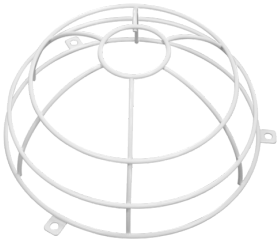

Wire basket BSK (Ø 200 x 90 mm)
Art.No: 92199

Dimensions: Ø 200 x 90 mm
Impact strength: IK09
Housing: coated steel basket