B.E.G. LUXOMAT®



PD3-1C-FC Set
92197-93085-92199

230V PIR motion detector with 360° detection and a range of up to Ø10m (78 m²)

Order data

Designation	Colour	Art.No
PD3-1C-FC	white	92197
Cover ring PD2/PD3 FC		93085
Wire basket BSK (Ø 200 x 90 mm)	white	92199

Technical data

Voltage:	110 – 240 V AC 50 / 60 Hz
Dimensions:	**Ø 200 x 90 mm (92199)**
Power consumption:	< 0.3 W
Detection area:	horizontal 360° (Ceiling mounting)
Range:	max. Ø 10 m across max. Ø 6 m towards max. Ø 4 m seated
Monitored area (tangential movement):	78 m² / 2.5 m mounting height
Mounting height min./max./recommended:	2 m / 5 m / 2.5 m
Degree / class of protection:	IP20 / Class II
Ambient temperature:	-25 °C to +50 °C
Housing:	**polycarbonate, UV-resistant + coated steel basket (92199)**
Material color:	**jet black glossy, similar to RAL9005 (93085)**
Channel 1 (lighting control)	
Switching power:	2000 W, cos φ = 1 1000 VA, cos φ = 0.5 400 W LED, minimum runtime > 5 min max. inrush current Ip (20 ms) = 80 A
Type of contact (k):	µ-contact, NO contact
Follow-up time:	30 sec – 30 min, Pulse
Switch-on threshold:	10 – 2000 Lux

Product information

Set : PD3-1C-FC + Cover ring PD2/PD3 FC jet black glossy, similar to RAL9005 + Wire basket BSK (Ø 200 x 90 mm) white

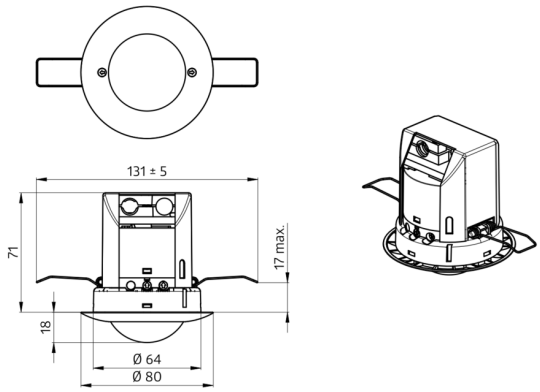
131 ± 5
71
17 max.
18
Ø 64
Ø 80

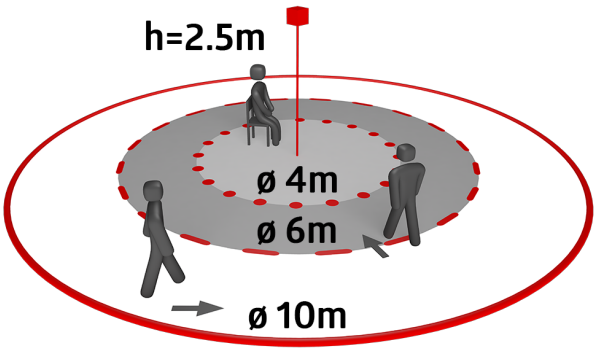
h=2.5m
ø 4m
ø 6m
ø 10m

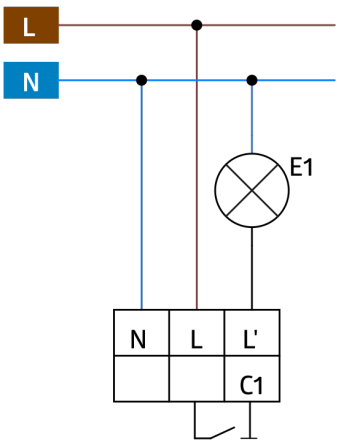
L
N
E1
N
L
L'
C1

Set items

To receive the bundle according to the technical specification, please order the items listed.



PD3-1C-FC
Art.No: 92197

Voltage: 110 – 240 V AC 50 / 60 Hz
Dimensions: Ø 85 x 79 mm
Power consumption: < 0.3 W



Cover ring PD2/PD3 FC
Art.No: 93085

Dimensions: Ø 84 x 9 mm
Housing: polycarbonate, UV-resistant
Material color: jet black glossy, similar to RAL9005

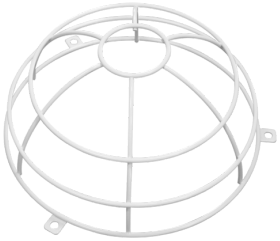

Wire basket BSK (Ø 200 x 90 mm)
Art.No: 92199

Dimensions: Ø 200 x 90 mm
Impact strength: IK09
Housing: coated steel basket