PD2N-S Set
93240-93763



Slave PIR motion detector with 360° coverage and a range of up to Ø10m (78 m²)

Order data

Designation	Colour	Art.No
PD2N-S	white	93240
Cover ring PD2N FM	black	93763

Technical data

Voltage:	110 – 240 V AC 50 / 60 Hz
Dimensions:	Ø 82 x 86 mm
Power consumption:	approx. 0.2 W
Detection area:	horizontal 360° (Ceiling mounting)
Range:	max. Ø 10 m across max. Ø 6 m towards max. Ø 4 m seated
Monitored area (tangential movement):	78 m² / 2.5 m mounting height
Mounting height min./max./recommended:	2 m / 5 m / 2.5 m
Degree / class of protection:	IP20 / Class II
Impact strength:	IK05
Ambient temperature:	-25 °C to +50 °C
Housing:	polycarbonate, UV-resistant
Material color:	**black mat, similar to RAL9005 (93763)**
Pulse interval:	2 or 9 sec

Product information

Set : PD2N-S + Cover ring PD2N FM black mat, similar to RAL9005

Slave device detector with circular detection area

For extending the detection area of a Master device

Trigger pulse to master device upon detected movement independent of the ambient light level

Compatible with 230 V devices. Concerning exceptions please see the respective master device.

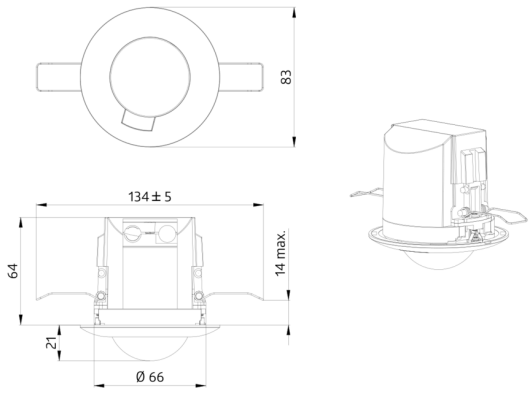
83
134 ± 5
64
14 max.
21
Ø 66

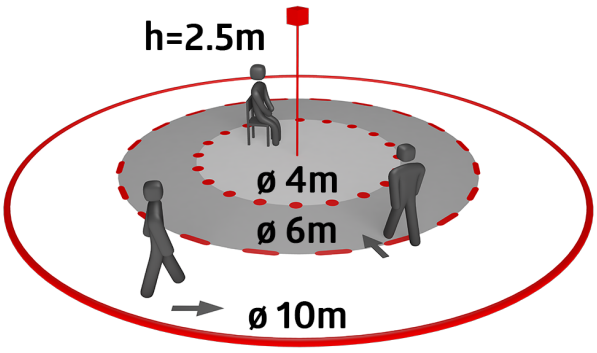
h=2.5m
ø 4m
ø 6m
ø 10m

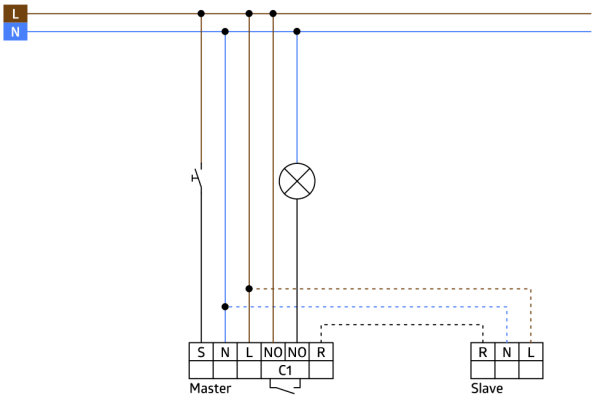
L
N
S
N
L
NO
NO
R
C1
Master
R
N
L
Slave

Set items

To receive the bundle according to the technical specification, please order the items listed.



PD2N-S
Art.No: 93240

Voltage: 110 – 240 V AC 50 / 60 Hz
Dimensions: Ø 82 x 86 mm
Power consumption: approx. 0.2 W

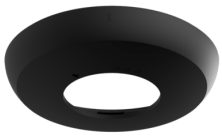

Cover ring PD2N FM
Art.No: 93763

Dimensions: Ø 106 x 20 mm
Impact strength: IK05
Housing: polycarbonate, UV-resistant