B.E.G. LUXOMAT® net




# PD2N-OCCULOG-BMS2-FC DALI-2 Set 93488-93773

DALI-2 certified product

Powered via DALI bus

DALI multimaster technology according to IEC 62386 part 103

## Order data

| Designation | Colour | Art.No |
|---|---|---|
| PD2N-OCCULOG-BMS2-FC DALI-2 | white | 93488 |
| Cover ring PD2N FC | black | 93773 |

## Technical data

| | |
|---|---|
| Voltage: | via DALI Bus, max. 22.5 V DC |
| Dimensions: | Ø 83 x 55 mm |
| Settings: | via DALI bus and any software that supports the configuration of existing instance types in accordance with IEC62386 |
| Typ. power input: | 10 mA |
| Settling time: | 200 ms |
| Detection area: | horizontal 360° (Ceiling mounting) |
| Range: | max. Ø 10 m across<br>max. Ø 6 m towards<br>max. Ø 4 m seated |
| Monitored area (tangential movement): | 78 m² / 2.5 m mounting height |
| Mounting height min./max./recommended: | 2 m / 5 m / 2.5 m |
| Degree / class of protection: | IP20 / Class II |
| Impact strength: | IK05 |
| Measured light output: | 0 - 4095 Lux, Mixed light measuring |
| Ambient temperature: | -25 °C to +55 °C |
| Temperature measurement range: | -5 °C to +45 °C |
| Housing: | Polycarbonate |
| Material color: | **black mat, similar to RAL9005 (93773)** |
| Number of PIR sensors: | 1 |

## Product information

Set : PD2N-OCCULOG-BMS2-FC DALI-2 + Cover ring PD2N FC black mat, similar to RAL9005

DALI multisensor (input device) for installation in suspended ceilings. The data collected is used to monitor room occupancy, brightness, IR signals, temperature, humidity, and volatile organic compounds (VOCs)

DALI-2 certified product

Powered via DALI bus

DALI multimaster technology according to IEC 62386 part 103

Instance 0 provides information regarding occupancy and movement for the DALI-Bus according to IEC 62386 part 303

Instance 1 provides LUX values for the DALI-Bus according to IEC 62386 part 304

Instances 2 to 6 provide information regarding the pressing of control buttons of a compatible mini-IR remote control according to IEC 62386 part 301 on the DALI bus

Instance 7 provides temperature information on the DALI bus in accordance with IEC 62386, Part 306

Instance 8 provides information regarding relative humidity in accordance with IEC 62386 Part 306 on the DALI bus

Instance 9 provides information regarding volatile organic compounds (VOCs) in accordance with IEC 62386 Part 306 on the DALI bus

Mixed light measurement with internal and external light sensor

Custom sensitivity adjustment of the PIR sensor via memory bank 2

Status LEDs are configurable via memory bank 2

Light sensor weighting can be adjusted via memory bank 2

Light sensor bit resolution adjustable via memory bank 2

Reflectance factor for calculated lux value can be set via memory bank 2

Bright LED indication for commissioning

Spring-clamps

Cover plates for adjusting the detection zone

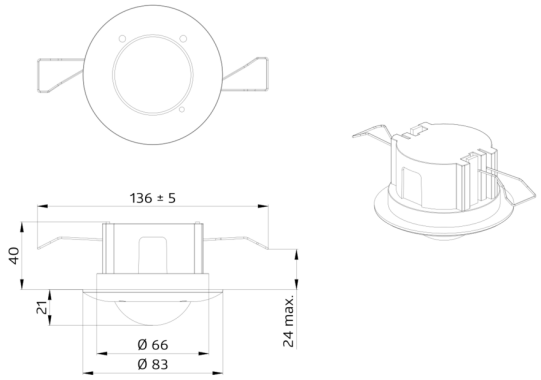
136 ± 5
40
21
24 max.
Ø 66
Ø 83

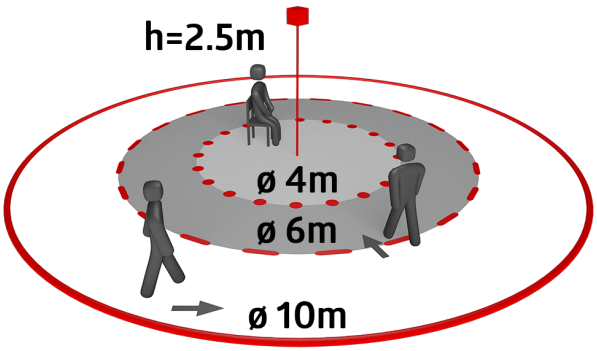
h=2.5m
ø 4m
ø 6m
ø 10m

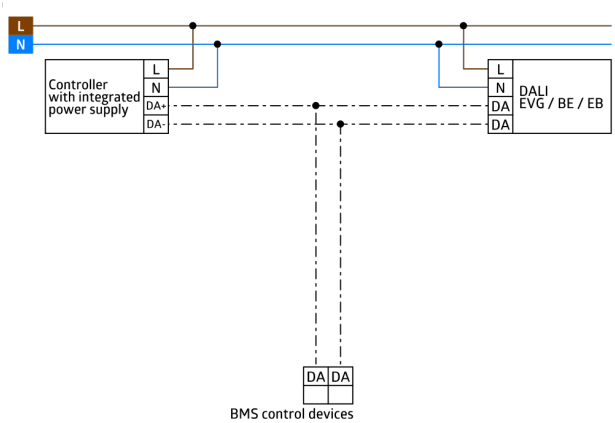
L
N
Controller with integrated power supply
L
N
DA+
DA-
L
N
DA
DA
DALI EVG / BE / EB
DA
DA
BMS control devices

## Set items

To receive the bundle according to the technical specification, please order the items listed.




**PD2N-OCCULOG-BMS2-FC DALI-2**
Art.No: 93488

Voltage: via DALI Bus, max. 22.5 V DC
Dimensions: Ø 83 x 55 mm
Settings: via DALI bus and any software that supports the configuration of existing instance types in accordance with IEC62386



**Cover ring PD2N FC**
Art.No: 93773

Dimensions: Ø 82 x 13 mm
Impact strength: IK05
Housing: polycarbonate, UV-resistant