B.E.G. LUXOMAT® net



PD2N-OCCULOG-BMS2-FC DALI-2 Set 93488-93772

DALI-2 certified product

Powered via DALI bus

DALI multimaster technology according to IEC 62386 part 103

Order data

Designation	Colour	Art.No
PD2N-OCCULOG-BMS2-FC DALI-2	white	93488
Cover ring PD2N FC	traffic white	93772

Technical data

Voltage:	via DALI Bus, max. 22.5 V DC
Dimensions:	Ø 83 x 55 mm
Settings:	via DALI bus and any software that supports the configuration of existing instance types in accordance with IEC62386
Typ. power input:	10 mA
Settling time:	200 ms
Detection area:	horizontal 360° (Ceiling mounting)
Range:	max. Ø 10 m across max. Ø 6 m towards max. Ø 4 m seated
Monitored area (tangential movement):	78 m² / 2.5 m mounting height
Mounting height min./max./recommended:	2 m / 5 m / 2.5 m
Degree / class of protection:	IP20 / Class II
Impact strength:	IK05
Measured light output:	0 - 4095 Lux, Mixed light measuring
Ambient temperature:	-25 °C to +55 °C
Temperature measurement range:	-5 °C to +45 °C
Housing:	Polycarbonate
Material color:	**traffic white mat, similar to RAL9016 (93772)**
Number of PIR sensors:	1

Product information

Set : PD2N-OCCULOG-BMS2-FC DALI-2 + Cover ring PD2N FC traffic white mat, similar to RAL9016

DALI multisensor (input device) for installation in suspended ceilings. The data collected is used to monitor room occupancy, brightness, IR signals, temperature, humidity, and volatile organic compounds (VOCs)

DALI-2 certified product

Powered via DALI bus

DALI multimaster technology according to IEC 62386 part 103

Instance 0 provides information regarding occupancy and movement for the DALI-Bus according to IEC 62386 part 303

Instance 1 provides LUX values for the DALI-Bus according to IEC 62386 part 304

Instances 2 to 6 provide information regarding the pressing of control buttons of a compatible mini-IR remote control according to IEC 62386 part 301 on the DALI bus

Instance 7 provides temperature information on the DALI bus in accordance with IEC 62386, Part 306

Instance 8 provides information regarding relative humidity in accordance with IEC 62386 Part 306 on the DALI bus

Instance 9 provides information regarding volatile organic compounds (VOCs) in accordance with IEC 62386 Part 306 on the DALI bus

Mixed light measurement with internal and external light sensor

Custom sensitivity adjustment of the PIR sensor via memory bank 2

Status LEDs are configurable via memory bank 2

Light sensor weighting can be adjusted via memory bank 2

Light sensor bit resolution adjustable via memory bank 2

Reflectance factor for calculated lux value can be set via memory bank 2

Bright LED indication for commissioning

Spring-clamps

Cover plates for adjusting the detection zone

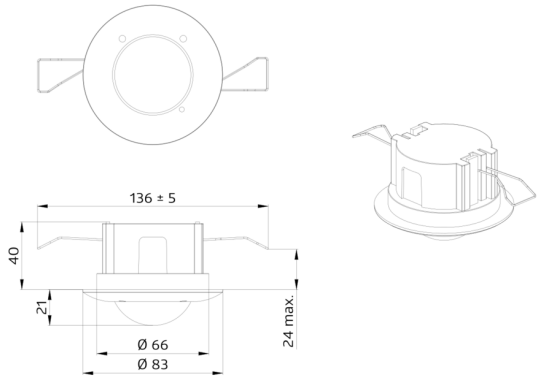
136 ± 5
40
21
24 max.
Ø 66
Ø 83

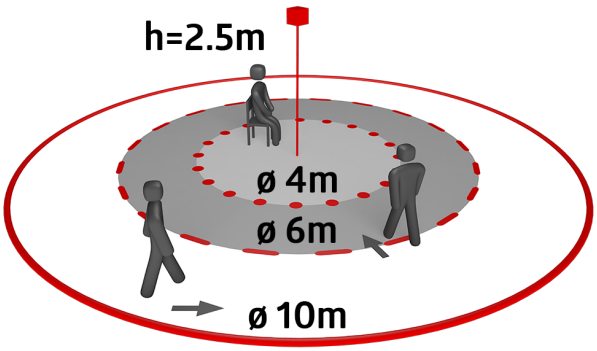
h=2.5m
ø 4m
ø 6m
ø 10m

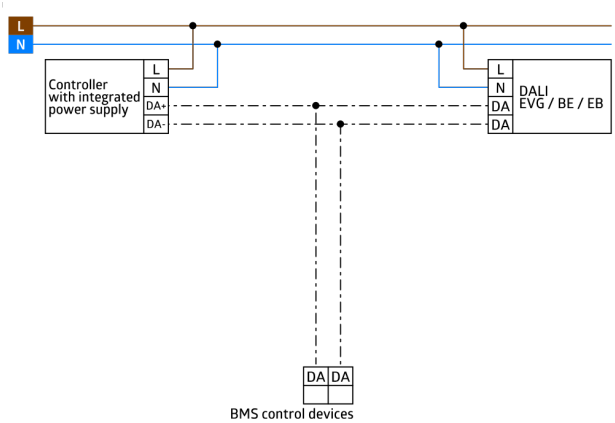
L
N
Controller with integrated power supply
L
N
DA+
DA-
L
N
DA
DA
DALI EVG / BE / EB
DA
DA
BMS control devices

Set items

To receive the bundle according to the technical specification, please order the items listed.



PD2N-OCCULOG-BMS2-FC DALI-2
Art.No: 93488

Voltage: via DALI Bus, max. 22.5 V DC
Dimensions: Ø 83 x 55 mm
Settings: via DALI bus and any software that supports the configuration of existing instance types in accordance with IEC62386



Cover ring PD2N FC
Art.No: 93772

Dimensions: Ø 82 x 13 mm
Impact strength: IK05
Housing: polycarbonate, UV-resistant