B.E.G. LUXOMAT® net



PD2N-LTMS-RR-FC Set 92119-92199

LTMS PIR multisensor with 360° detection and a range of up to Ø10m (78 m²), remote-controlled, reed relay, light/temperature/motion sensor

Order data

Designation	Colour	Art.No
PD2N-LTMS-RR-FC	white	92119
Wire basket BSK (Ø 200 x 90 mm)	white	92199

Technical data

Voltage:	16 – 48 V DC
Dimensions:	**Ø 200 x 90 mm (92199)**
Power consumption:	< 1 W
Detection area:	horizontal 360° (Ceiling mounting)
Range:	max. Ø 10 m across max. Ø 6 m towards max. Ø 4 m seated
Monitored area (tangential movement):	78 m² / 2.5 m mounting height
Mounting height min./max./recommended:	2 m / 5 m / 2.5 m
Degree / class of protection:	IP20 / Class II
Impact strength:	**IK09 (92199)**
Measured light output:	0 – 1000 Lux, 0-10 V, ca. 10 mV/ Lux
Ambient temperature:	0 °C to +50 °C
Temperatur Ausgabe:	0 °C – +50 °C, 0–10 V, ca. 200 mV/°C
Housing:	**polycarbonate, UV-resistant + coated steel basket (92199)**
Material color:	white mat, similar to RAL9010

Channel 1

Switching power:	48 V DC / 0.1 A , cos φ = 1
Type of contact (k):	µ-contact, dry NO contact
Follow-up time:	1 sec – 60 min, Pulse
Light measuring:	Mixed light measuring

Product information

Set : PD2N-LTMS-RR-FC + Wire basket BSK (Ø 200 x 90 mm) white

Multi-sensor for acquisition of data concerning occupancy (presence), temperature, and brightness.

For integration into proprietary bus system

Output of motion detection via switch contact

Output of current light and temperature values as analogue voltage

Fine adjustment of output values for light measurement and temperature via potentiometer on device

Additional functions can be set up using the optional remote control.

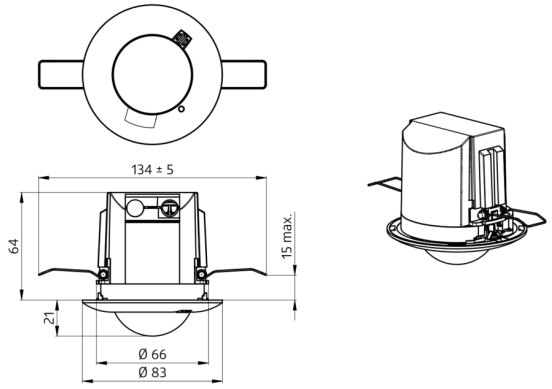
134 ± 5
64
15 max.
21
Ø 66
Ø 83

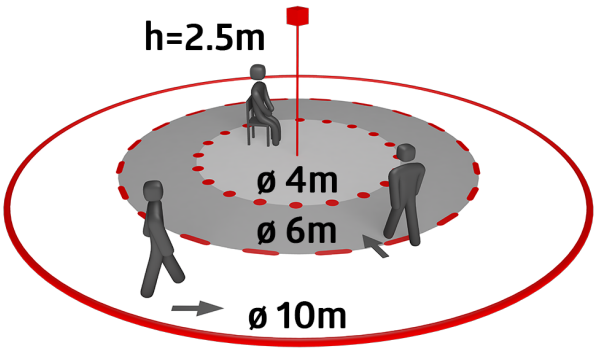
h=2.5m
ø 4m
ø 6m
ø 10m

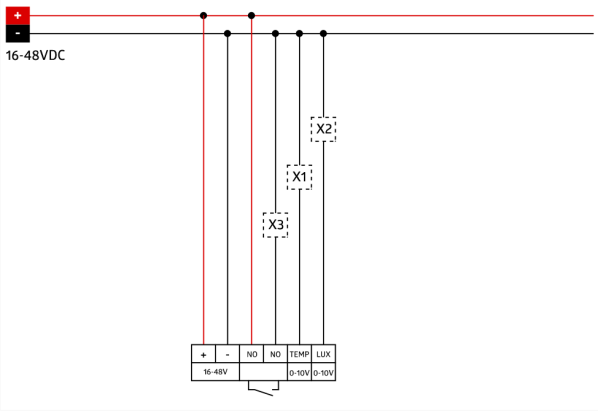
+
-
16-48VDC
X2
X1
X3
+
-
NO
NO
TEMP
LUX
16-48V
0-10V
0-10V

Set items

To receive the bundle according to the technical specification, please order the items listed.



PD2N-LTMS-RR-FC
Art.No: 92119

Voltage: 16 – 48 V DC
Dimensions: Ø 80 x 83 mm
Power consumption: < 1 W

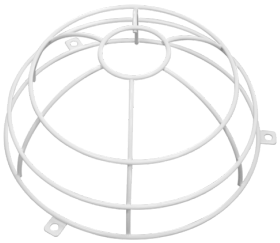

Wire basket BSK (Ø 200 x 90 mm)
Art.No: 92199

Dimensions: Ø 200 x 90 mm
Impact strength: IK09
Housing: coated steel basket