B.E.G. LUXOMAT® net



PD2N-LTMS-RR-FC

92119 EAN: 4007529921195

LTMS PIR multisensor with 360° detection and a range of up to Ø10m (78 m²), remote-controlled, reed relay, light/temperature/motion sensor

Order data

Designation	Colour	Art.No
PD2N-LTMS-RR-FC	white	92119

Accessories

Designation	Colour	Art.No
BLE-IR-Adapter	black	93067
IR-LTMS	-	92185
Wire basket BSK (Ø 200 x 90 mm)	white	92199
Blinds PD2N/PD3N		37367

Technical data

Voltage:	16 – 48 V DC
Dimensions:	Ø 80 x 83 mm
Power consumption:	< 1 W
Detection area:	horizontal 360° (Ceiling mounting)
Range:	max. Ø 10 m across max. Ø 6 m towards max. Ø 4 m seated
Monitored area (tangential movement):	78 m² / 2.5 m mounting height
Mounting height min./max./recommended:	2 m / 5 m / 2.5 m
Degree / class of protection:	IP20 / Class II
Impact strength:	IK05
Measured light output:	0 – 1000 Lux, 0-10 V, ca. 10 mV/ Lux
Ambient temperature:	0 °C to +50 °C
Temperatur Ausgabe:	0 °C – +50 °C, 0–10 V, ca. 200 mV/°C
Housing:	polycarbonate, UV-resistant
Material color:	white mat, similar to RAL9010
Channel 1	
Switching power:	48 V DC / 0.1 A , cos φ = 1
Type of contact (k):	µ-contact, dry NO contact
Follow-up time:	1 sec – 60 min, Pulse
Light measuring:	Mixed light measuring

Product information

Multi-sensor for acquisition of data concerning occupancy (presence), temperature, and brightness.

For integration into proprietary bus system

Output of motion detection via switch contact

Output of current light and temperature values as analogue voltage

Fine adjustment of output values for light measurement and temperature via potentiometer on device

Additional functions can be set up using the optional remote control.

Application examples:
small offices, staircases, open-plan offices, conference rooms, classrooms/seminar rooms

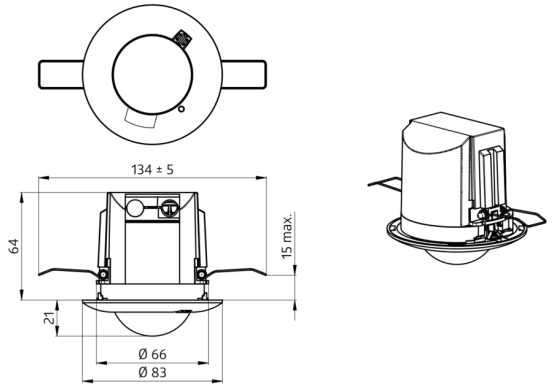
134 ± 5
64
15 max.
21
Ø 66
Ø 83

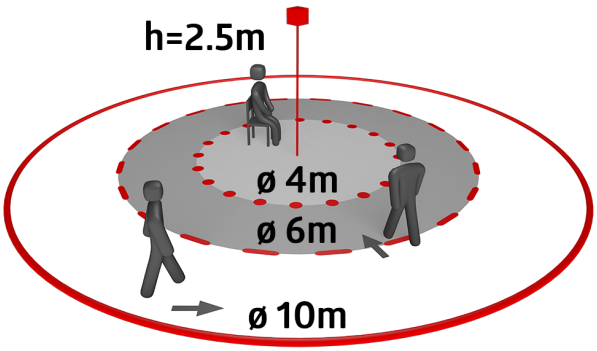
h=2.5m
ø 4m
ø 6m
ø 10m

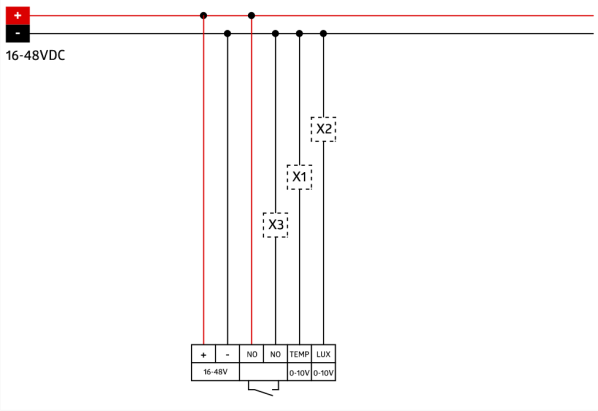
+
-
16-48VDC
X2
X1
X3
+
-
NO
NO
TEMP
LUX
16-48V
0-10V
0-10V

Accessories



BLE-IR-Adapter
Art.No: 93067

Dimensions: 40 x 55 x 103 mm
Material color: black
Frequency: 2.4 GHz ISM band, GFSK 0.2 dBm + 5.3 dBi = 5.5 dBm

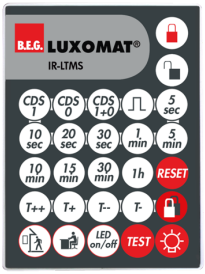

IR-LTMS
Art.No: 92185

Battery: 3.0 V Lithium CR2032 (inclusive)
Dimensions: 80 x 60 x 8 mm
Material color: -

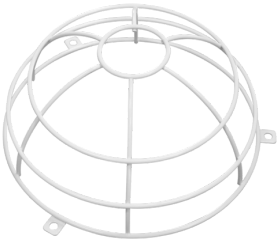

Wire basket BSK (Ø 200 x 90 mm)
Art.No: 92199

Dimensions: Ø 200 x 90 mm
Impact strength: IK09
Housing: coated steel basket

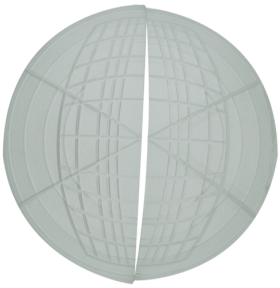

Blinds PD2N/PD3N
Art.No: 37367

Housing: ABS