B.E.G. LUXOMAT® net

PD2N-KNXs-ST-FM Set 93511-93752-93762



KNX PIR motion detector (standard) with 360° coverage and a range of up to Ø10m (78 m²)

Order data

Designation	Colour	Art.No
PD2N-KNXs-ST-FM	white	93511
SM socle mounting set IP54 PD2N- / PD4N-FM	traffic white	93752
Cover ring PD2N FM	traffic white	93762

Technical data

Voltage:	via KNX BUS
Dimensions:	**Ø 106 x 42 mm + Ø 109 x 19 mm (93752)**
Typ. power input:	12 mA
Detection area:	horizontal 360° (Ceiling mounting)
Range:	max. Ø 10 m across max. Ø 6 m towards max. Ø 4 m seated
Monitored area (tangential movement):	78 m² / 2.5 m mounting height
Mounting height min./max./recommended:	2 m / 5 m / 2.5 m
Degree / class of protection:	**IP20 / Class III + IP54 (93752)**
Impact strength:	IK05
Ambient temperature:	-25 °C to +55 °C
Housing:	polycarbonate, UV-resistant
Material color:	**traffic white mat, similar to RAL9016 (93762)**
Number of light sensors:	2
Number of PIR sensors:	1
KNX TP 256:	Yes
KNX Secure:	Yes
Orientation light:	5 – 100 % / OFF / 1 min – 255 min
Night light:	5 – 100 %
Brightness set value:	5 – 2000 Lux

Product information

Set : PD2N-KNXs-ST-FM + SM socle mounting set IP54 PD2N- / PD4N-FM traffic white mat, similar to RAL9016 + Cover ring PD2N FM traffic white mat, similar to RAL9016

KNX occupancy detector with integrated KNX bus connector

KNX Secure ready

Parameterisation from ETS 5 for integration into KNX systems

Individual adaption of the PIR sensor sensitivity

Mixed light measurement using internal, external and remote (optional) light sensors

Intelligent semi-automatic mode, occupancy-independent regulating mode (photoelectric switch), full automatic mode

1 x Light (for regulating or switching), 1 x slave output, 3 separate HVAC-blocs

Regulation of up to three lighting groups using offset (external influence possible)

Short presence, self-adjusting follow-up time, corridor function

Various locking functions

Soft-start

Recall of light scenes

Deactivatable status indicators

The product database for import into the ETS database can be downloaded from the B.E.G. homepage.

Detection area can be extended thanks to master-slave-mode

Extensive optimization options for light measurement

Measured light value is communicated to the bus

Adaption of dimming curve

Bidirectionally remote control-capable with the IR adapter and the B.E.G. smartphone app

PIN code

IR remote control-capable via IR remote control (optionally)

Programming button (phys. address) can be operated via remote control

HVAC mode (0=automatic, 1=comfort, 2=stand-by, 3=economy, 4=antifreeze/heat protection)

Manual influence via external KNX push buttons possible

Function control (heartbeat, cyclical sending)

Forced switch-off

Intelligent central-off function

Premonition of switch-off

Burn-in function for fluorescent lamps selectable from 1h till 100h

Behaviour upon bus voltage return definable at choice

Variable safety pause after switching off the lights

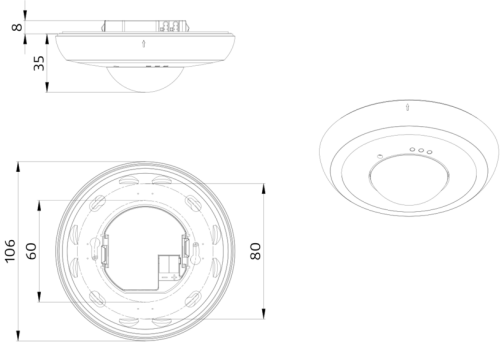
8
35
106
60
80

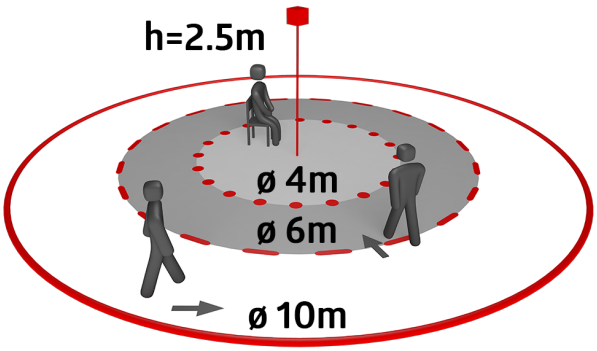
h=2.5m
ø 4m
ø 6m
ø 10m

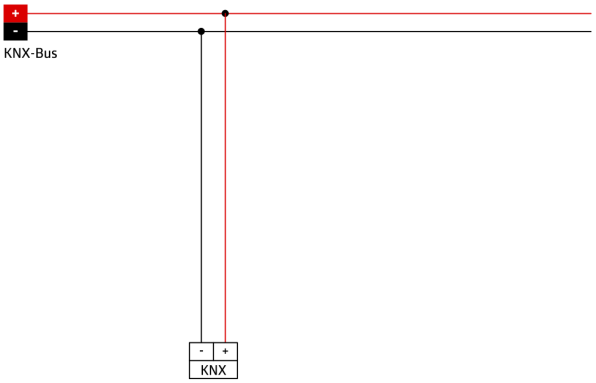
+
-
KNX-Bus
-
+
KNX

Set items

To receive the bundle according to the technical specification, please order the items listed.



PD2N-KNXs-ST-FM
Art.No: 93511

Voltage: via KNX BUS
Dimensions: Ø 106 x 42 mm
Typ. power input: 12 mA



SM socle mounting set IP54 PD2N- / PD4N-FM
Art.No: 93752

Dimensions: Ø 109 x 19 mm
Degree / class of protection: IP54
Housing: polycarbonate, UV-resistant

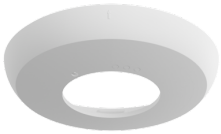

Cover ring PD2N FM
Art.No: 93762

Dimensions: Ø 106 x 20 mm
Impact strength: IK05
Housing: polycarbonate, UV-resistant