B.E.G. LUXOMAT® net



PD2N-KNXs-BA-FC Set 93533-93773

KNX PIR motion detector (Basic) with 360° detection and a range of up to Ø10m (78 m²)

Order data

Designation	Colour	Art.No
PD2N-KNXs-BA-FC	white	93533
Cover ring PD2N FC	black	93773

Technical data

Voltage:	via KNX BUS
Dimensions:	Ø 83 x 55 mm
Typ. power input:	12 mA
Detection area:	horizontal 360° (Ceiling mounting)
Range:	max. Ø 10 m across max. Ø 6 m towards max. Ø 4 m seated
Monitored area (tangential movement):	78 m² / 2.5 m mounting height
Mounting height min./max./recommended:	2 m / 5 m / 2.5 m
Degree / class of protection:	IP20 / Class III
Impact strength:	IK05
Ambient temperature:	-25 °C to +55 °C
Housing:	polycarbonate, UV-resistant
Material color:	**black mat, similar to RAL9005 (93773)**
Number of light sensors:	2
Number of PIR sensors:	1
KNX TP 256:	Yes
KNX Secure:	Yes
Brightness set value:	5 – 2000 Lux

Product information

Set : PD2N-KNXs-BA-FC + Cover ring PD2N FC black mat, similar to RAL9005

KNX occupancy detector with integrated KNX bus connector

KNX Secure ready

Individual adaption of the PIR sensor sensitivity

Mixed light measurement using internal, external and remote (optional) light sensors

Intelligent semi-automatic mode, occupancy-independent regulating mode (photoelectric switch), full automatic mode

1 x light output (for regulating or switching), 1 x slave output

Soft-start

Deactivatable status indicators

Detection area can be extended thanks to master-slave-mode

Extensive optimization options for light measurement

Measured light value is communicated to the bus

Manual influence via external KNX push buttons possible

Behaviour upon bus voltage return definable at choice

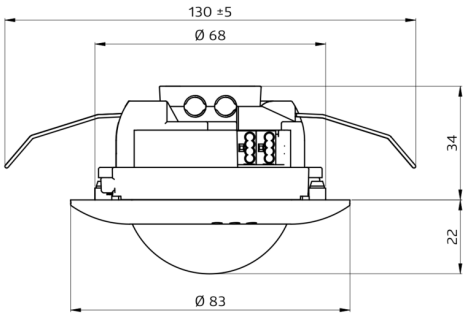
130 ±5
Ø 68
34
22
Ø 83

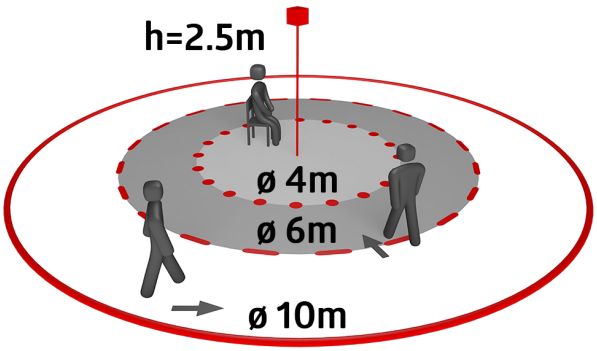
h=2.5m
ø 4m
ø 6m
ø 10m

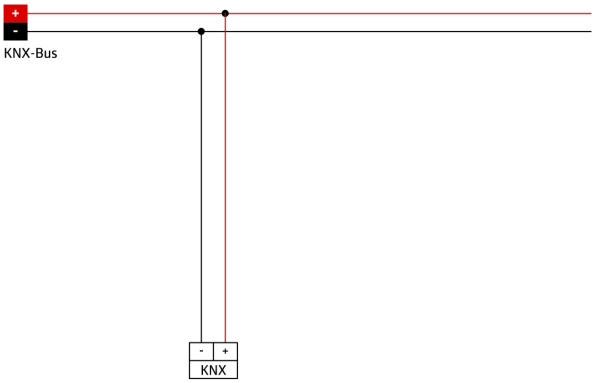
+
-
KNX-Bus
-
+
KNX

Set items

To receive the bundle according to the technical specification, please order the items listed.



PD2N-KNXs-BA-FC
Art.No: 93533

Voltage: via KNX BUS
Dimensions: Ø 83 x 55 mm
Typ. power input: 12 mA



Cover ring PD2N FC
Art.No: 93773

Dimensions: Ø 82 x 13 mm
Impact strength: IK05
Housing: polycarbonate, UV-resistant