B.E.G. LUXOMAT® net



PD2N-DALI-SYS-FM Set 93368-93761-92199

DALI-SYS PIR motion detector with 360° detection and a range of up to Ø10m (78 m²), for integration into DALI-SYS systems

Order data

Designation	Colour	Art.No
PD2N-DALI-SYS-FM	white	93368
Cover ring PD2N FM	anthracite	93761
Wire basket BSK (Ø 200 x 90 mm)	white	92199

Technical data

Voltage:	via DALI Bus, max. 22.5 V DC
Dimensions:	**Ø 200 x 90 mm (92199)**
Settings:	B.E.G. PC Tools, B.E.G. DALI-SYS router
Typ. power input:	3 mA
Detection area:	horizontal 360° (Ceiling mounting)
Range:	max. Ø 10 m across max. Ø 6 m towards max. Ø 4 m seated
Monitored area (tangential movement):	78 m² / 2.5 m mounting height
Mounting height min./max./recommended:	2 m / 5 m / 2.5 m
Degree / class of protection:	IP20 / Class II
Impact strength:	**IK09 (92199)**
Ambient temperature:	-25 °C to +55 °C
Housing:	**polycarbonate, UV-resistant + coated steel basket (92199)**
Material color:	**anthracite mat, similar to RAL7016 (93761)**
Follow-up time:	1 sec – 120 min
Orientation light:	5 – 100 % / 1 min – 120 min / ∞
Brightness set value:	10 – 2500 Lux

Product information

Set : PD2N-DALI-SYS-FM + Cover ring PD2N FM anthracite mat, similar to RAL7016 + Wire basket BSK (Ø 200 x 90 mm) white

DALI multisensor

Powered via DALI bus

Seemless integration in B.E.G. LUXOMAT®net DALI-SYS

Bright LED indication for commissioning

Detection area can be extended thanks to master-slave-mode

Mixed light measurement with internal and external light sensor

Semi-automatic, full-automatic or twilight switch mode

Integrated daylight harvesting circuit (or switch output)

Guided Light, Soft-Start PLUS, Orientation light PLUS

Works out-of-the box for easy installation check

Full range of functions can only be activated with other products of the product group B.E.G. LUXOMAT®net DALI-SYS

This article is a component of a lighting control system from B.E.G., which supports the use of DALI control gear (luminaires, relays) from other manufacturers

The use of DALI application controllers from other manufacturers is not supported

The use of DALI input devices (sensors, push-buttons) from other manufacturers is not supported

Additional system components (hardware) from B.E.G. are required

Additional services (planning, commissioning and maintenance) from B.E.G. are required

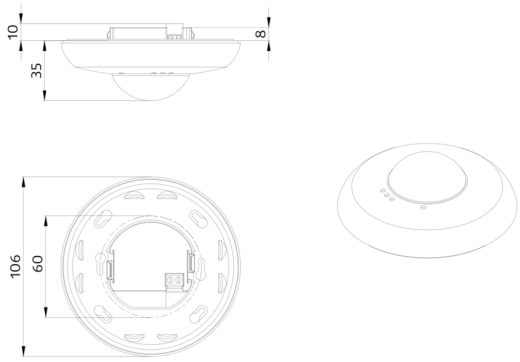
10
8
35
106
60

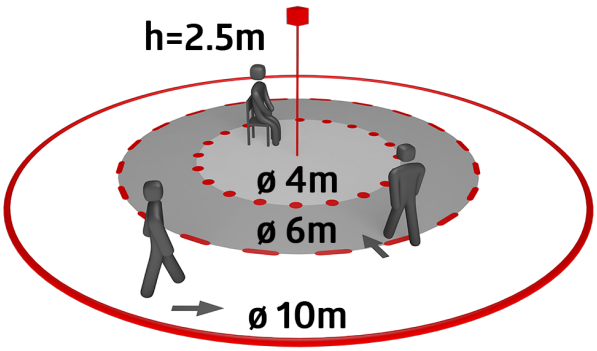
h=2.5m
ø 4m
ø 6m
ø 10m

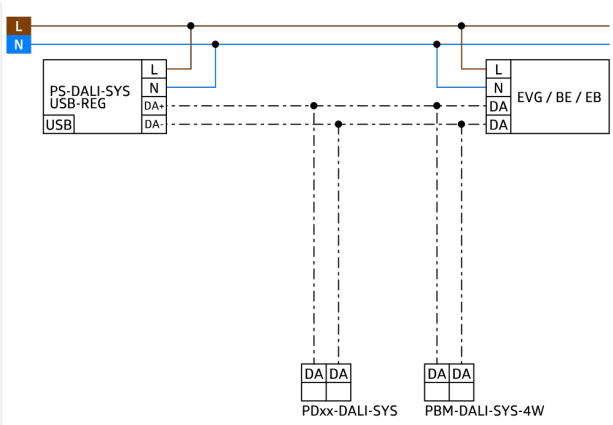
L
N
PS-DALI-SYS
USB-REG
USB
L
N
DA+
DA-
L
N
DA
DA
EVG / BE / EB
DA DA
PDxx-DALI-SYS
DA DA
PBM-DALI-SYS-4W

Set items

To receive the bundle according to the technical specification, please order the items listed.



PD2N-DALI-SYS-FM
Art.No: 93368

Voltage: via DALI Bus, max. 22.5 V DC
Dimensions: Ø 106 x 42 mm
Settings: B.E.G. PC Tools, B.E.G. DALI-SYS router

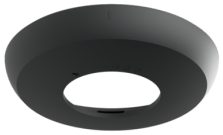

Cover ring PD2N FM
Art.No: 93761

Dimensions: Ø 106 x 20 mm
Impact strength: IK05
Housing: polycarbonate, UV-resistant

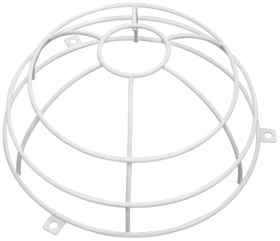

Wire basket BSK (Ø 200 x 90 mm)
Art.No: 92199

Dimensions: Ø 200 x 90 mm
Impact strength: IK09
Housing: coated steel basket