B.E.G. LUXOMAT® net



PD2N-DALI-SYS-FM Set 93368-93752-93762

DALI-SYS PIR motion detector with 360° detection and a range of up to Ø10m (78 m²), for integration into DALI-SYS systems

Order data

Designation	Colour	Art.No
PD2N-DALI-SYS-FM	white	93368
SM socle mounting set IP54 PD2N- / PD4N-FM	traffic white	93752
Cover ring PD2N FM	traffic white	93762

Technical data

Voltage:	via DALI Bus, max. 22.5 V DC
Dimensions:	**Ø 106 x 42 mm + Ø 109 x 19 mm (93752)**
Settings:	B.E.G. PC Tools, B.E.G. DALI-SYS router
Typ. power input:	3 mA
Detection area:	horizontal 360° (Ceiling mounting)
Range:	max. Ø 10 m across max. Ø 6 m towards max. Ø 4 m seated
Monitored area (tangential movement):	78 m² / 2.5 m mounting height
Mounting height min./max./recommended:	2 m / 5 m / 2.5 m
Degree / class of protection:	**IP20 / Class II + IP54 (93752)**
Impact strength:	IK05
Ambient temperature:	-25 °C to +55 °C
Housing:	polycarbonate, UV-resistant
Material color:	**traffic white mat, similar to RAL9016 (93762)**
Follow-up time:	1 sec – 120 min
Orientation light:	5 – 100 % / 1 min – 120 min / ∞
Brightness set value:	10 – 2500 Lux

Product information

Set : PD2N-DALI-SYS-FM + SM socle mounting set IP54 PD2N- / PD4N-FM traffic white mat, similar to RAL9016 + Cover ring PD2N FM traffic white mat, similar to RAL9016

DALI multisensor

Powered via DALI bus

Seemless integration in B.E.G. LUXOMAT®net DALI-SYS

Bright LED indication for commissioning

Detection area can be extended thanks to master-slave-mode

Mixed light measurement with internal and external light sensor

Semi-automatic, full-automatic or twilight switch mode

Integrated daylight harvesting circuit (or switch output)

Guided Light, Soft-Start PLUS, Orientation light PLUS

Works out-of-the box for easy installation check

Full range of functions can only be activated with other products of the product group B.E.G. LUXOMAT®net DALI-SYS

This article is a component of a lighting control system from B.E.G., which supports the use of DALI control gear (luminaires, relays) from other manufacturers

The use of DALI application controllers from other manufacturers is not supported

The use of DALI input devices (sensors, push-buttons) from other manufacturers is not supported

Additional system components (hardware) from B.E.G. are required

Additional services (planning, commissioning and maintenance) from B.E.G. are required

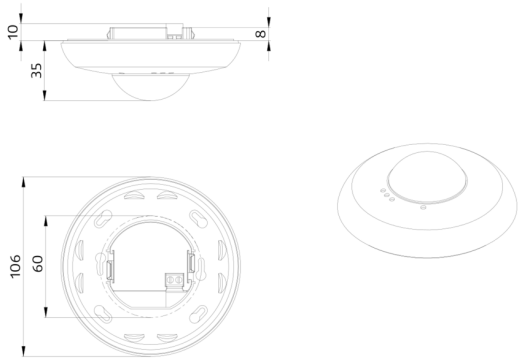
10
8
35
106
60

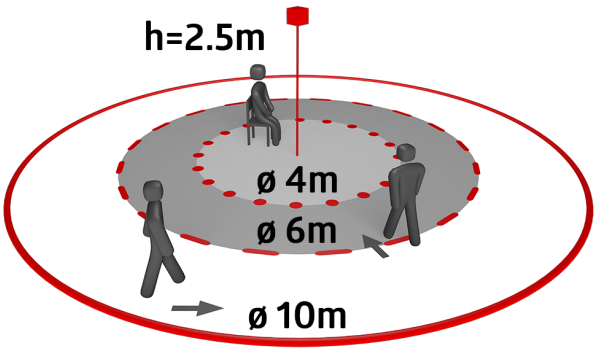
h=2.5m
ø 4m
ø 6m
ø 10m

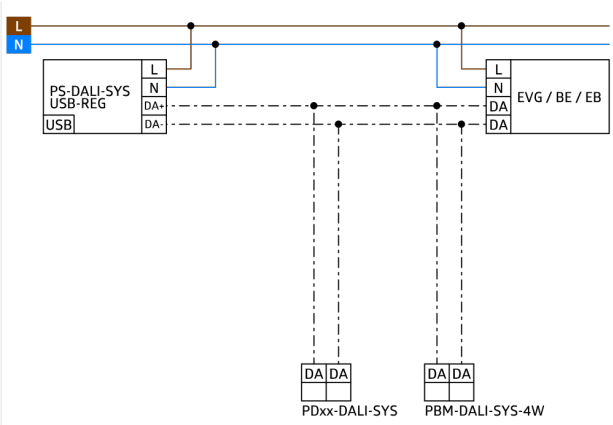
L
N
PS-DALI-SYS
USB-REG
USB
L
N
DA+
DA-
L
N
DA
DA
EVG / BE / EB
DA DA
PDxx-DALI-SYS
DA DA
PBM-DALI-SYS-4W

Set items

To receive the bundle according to the technical specification, please order the items listed.



PD2N-DALI-SYS-FM
Art.No: 93368

Voltage: via DALI Bus, max. 22.5 V DC
Dimensions: Ø 106 x 42 mm
Settings: B.E.G. PC Tools, B.E.G. DALI-SYS router



SM socle mounting set IP54 PD2N- / PD4N-FM
Art.No: 93752

Dimensions: Ø 109 x 19 mm
Degree / class of protection: IP54
Housing: polycarbonate, UV-resistant

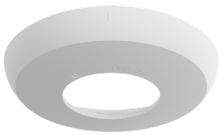

Cover ring PD2N FM
Art.No: 93762

Dimensions: Ø 106 x 20 mm
Impact strength: IK05
Housing: polycarbonate, UV-resistant