B.E.G. LUXOMAT® net



PD2N-CAS Set
93477-93782-92199

CASAMBI-compatible PIR motion sensor with 360° detection and a range of up to Ø10m (78 m²)

Order data

Designation	Colour	Art.No
PD2N-CAS	white	93477
SM socle mounting set IP54 PD2N H	traffic white	93782
Wire basket BSK (Ø 200 x 90 mm)	white	92199

Technical data

Voltage:	230 V AC ±10% 50 Hz
Dimensions:	**Ø 200 x 90 mm (92199)**
Settings:	Casambi App
Power consumption:	0.5 W
Detection area:	horizontal 360° (Ceiling mounting)
Range:	max. Ø 10 m across max. Ø 6 m towards max. Ø 4 m seated
Monitored area (tangential movement):	78 m² / 2.5 m mounting height
Mounting height min./max./recommended:	2 m / 5 m / 2.5 m
Degree / class of protection:	**IP54 (93782)**
Impact strength:	**IK09 (92199)**
Ambient temperature:	-5 °C to +45 °C
Housing:	**polycarbonate, UV-resistant + coated steel basket (92199)**
Material color:	**traffic white, similar to RAL9016 (93782)**
Number of PIR sensors:	1
Channel 1 (lighting control)	
Follow-up time:	1 sec – 60 min
Brightness set value:	1 – 4000 Lux
Light measuring:	Mixed light measuring

Product information

Set : PD2N-CAS + SM socle mounting set IP54 PD2N H traffic white, similar to RAL9016 + Wire basket BSK (Ø 200 x 90 mm) white

Casambi-enabled occupancy detector

Mixed light measurement with internal and external light sensor

Weighting between internal and external light sensor can be adapted to suit the application

Adjustment of the reflection factor and input of the luminosity for the display of the actual luminosity in the app

Extension of the detection area with additional B.E.G. Casambi devices possible

Individual adaption of the PIR sensor sensitivity

Detection area can be restricted with blinds

Functions adjustable via Casambi app

Including pre-assembled spring clamp with strain relief and contact protection cap for recessed ceiling mounting

Accessory for surface mounting available

Accessories for wall mounting optionally available

Further accessories for colour matching optionally available

Bright LED indication for commissioning

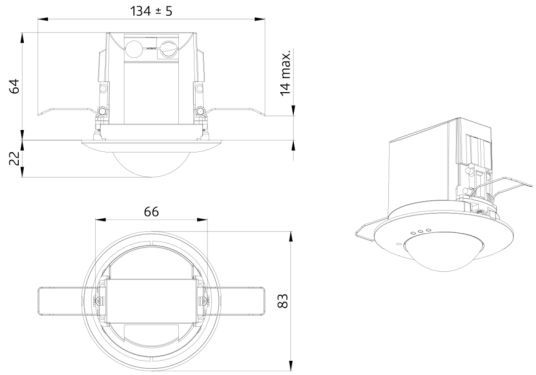

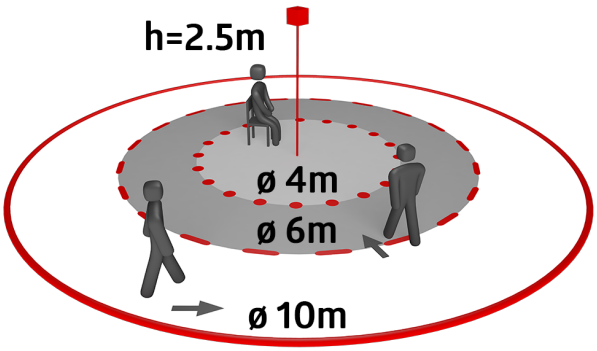

CASAMBI

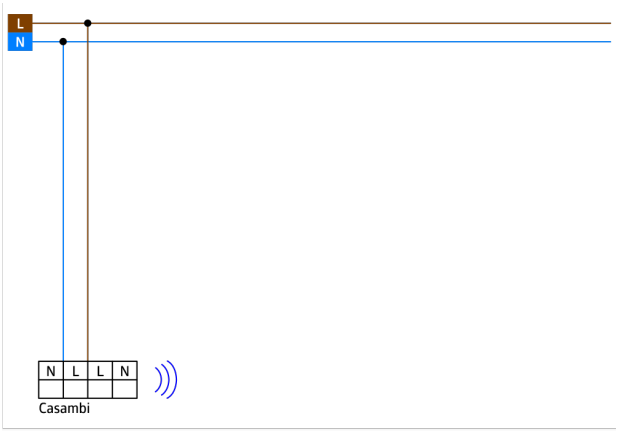
L
N
N L L N
Casambi

Set items

To receive the bundle according to the technical specification, please order the items listed.



PD2N-CAS
Art.No: 93477

Voltage: 230 V AC ±10% 50 Hz
Dimensions: Ø 84 x 85 mm
Settings: Casambi App



SM socle mounting set IP54 PD2N H
Art.No: 93782

Dimensions: Ø 110 x 65 mm
Degree / class of protection: IP54
Material color: traffic white, similar to RAL9016

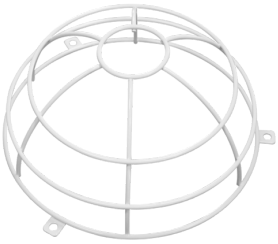

Wire basket BSK (Ø 200 x 90 mm)
Art.No: 92199

Dimensions: Ø 200 x 90 mm
Impact strength: IK09
Housing: coated steel basket