B.E.G. LUXOMAT® net




# PD2N-CAS Set
# 93477-93763-92199

CASAMBI-compatible PIR motion sensor with 360° detection and a range of up to Ø10m (78 m²)

## Order data

| Designation | Colour | Art.No |
|---|---|---|
| PD2N-CAS | white | 93477 |
| Cover ring PD2N FM | black | 93763 |
| Wire basket BSK (Ø 200 x 90 mm) | white | 92199 |

## Technical data

| | |
|---|---|
| Voltage: | 230 V AC ±10% 50 Hz |
| Dimensions: | **Ø 200 x 90 mm (92199)** |
| Settings: | Casambi App |
| Power consumption: | 0.5 W |
| Detection area: | horizontal 360° (Ceiling mounting) |
| Range: | max. Ø 10 m across<br>max. Ø 6 m towards<br>max. Ø 4 m seated |
| Monitored area (tangential movement): | 78 m² / 2.5 m mounting height |
| Mounting height min./max./recommended: | 2 m / 5 m / 2.5 m |
| Degree / class of protection: | IP20 / Class II |
| Impact strength: | **IK09 (92199)** |
| Ambient temperature: | -5 °C to +45 °C |
| Housing: | **polycarbonate, UV-resistant + coated steel basket (92199)** |
| Material color: | **black mat, similar to RAL9005 (93763)** |
| Number of PIR sensors: | 1 |
| **Channel 1 (lighting control)** | |
| Follow-up time: | 1 sec – 60 min |
| Brightness set value: | 1 – 4000 Lux |
| Light measuring: | Mixed light measuring |

## Product information

Set : PD2N-CAS + Cover ring PD2N FM black mat, similar to RAL9005 + Wire basket BSK (Ø 200 x 90 mm) white

Casambi-enabled occupancy detector

Mixed light measurement with internal and external light sensor

Weighting between internal and external light sensor can be adapted to suit the application

Adjustment of the reflection factor and input of the luminosity for the display of the actual luminosity in the app

Extension of the detection area with additional B.E.G. Casambi devices possible

Individual adaption of the PIR sensor sensitivity

Detection area can be restricted with blinds

Functions adjustable via Casambi app

Including pre-assembled spring clamp with strain relief and contact protection cap for recessed ceiling mounting

Accessory for surface mounting available

Accessories for wall mounting optionally available

Further accessories for colour matching optionally available

Bright LED indication for commissioning

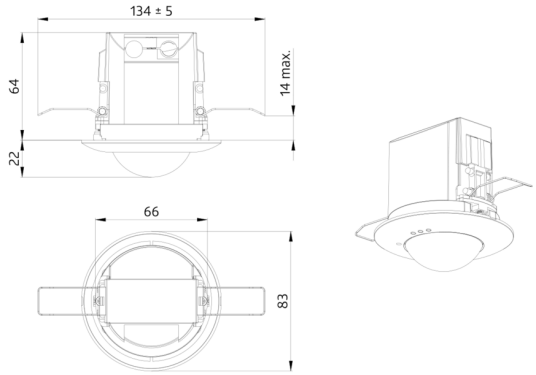


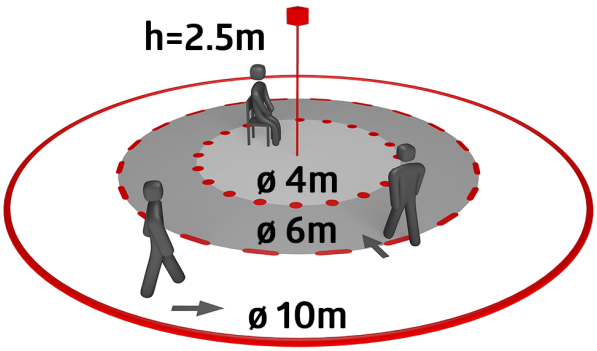


CASAMBI

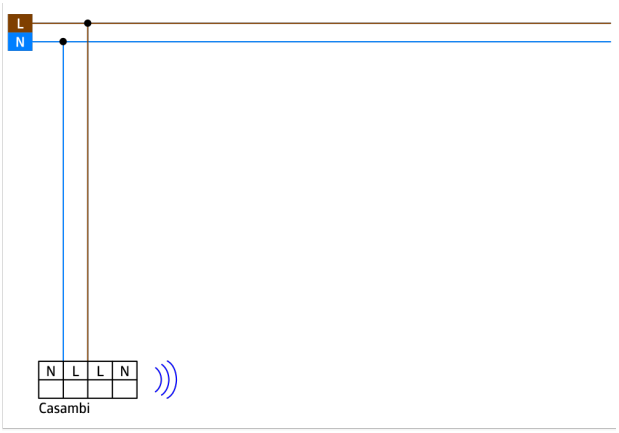
L
N
N L L N
Casambi

## Set items

To receive the bundle according to the technical specification, please order the items listed.




**PD2N-CAS**
Art.No: 93477

Voltage: 230 V AC ±10% 50 Hz
Dimensions: Ø 84 x 85 mm
Settings: Casambi App

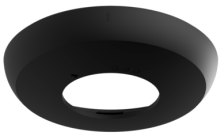

**Cover ring PD2N FM**
Art.No: 93763

Dimensions: Ø 106 x 20 mm
Impact strength: IK05
Housing: polycarbonate, UV-resistant

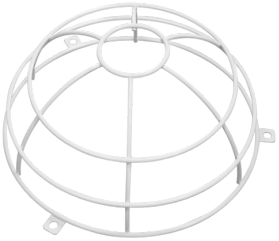

**Wire basket BSK (Ø 200 x 90 mm)**
Art.No: 92199

Dimensions: Ø 200 x 90 mm
Impact strength: IK09
Housing: coated steel basket