B.E.G. LUXOMAT® net



PD2N-BMS-FM DALI-2 Set 93544-93753-93763-92199

DALI-2 (BMS) PIR motion detector with 360° coverage and a range of up to Ø10m (78 m²), DALI-2 input device

Order data

Designation	Colour	Art.No
PD2N-BMS-FM DALI-2	white	93544
SM socle mounting set IP54 PD2N- / PD4N-FM	black	93753
Cover ring PD2N FM	black	93763
Wire basket BSK (Ø 200 x 90 mm)	white	92199

Technical data

Voltage:	via DALI Bus, max. 22.5 V DC
Dimensions:	**Ø 200 x 90 mm (92199)**
Settings:	via DALI-Bus and application which supports DALI multisensors according to IEC62386, parts 101, 103, 303 and 304
Typ. power input:	7 mA
Settling time:	200 ms
Detection area:	horizontal 360° (Ceiling mounting)
Range:	max. Ø 10 m across max. Ø 6 m towards max. Ø 4 m seated
Monitored area (tangential movement):	78 m² / 2.5 m mounting height
Mounting height min./max./recommended:	2 m / 5 m / 2.5 m
Degree / class of protection:	**IP20 / Class II + IP54 (93753)**
Impact strength:	**IK09 (92199)**
Measured light output:	0 - 4095 Lux, Mixed light measuring
Ambient temperature:	-25 °C to +55 °C
Housing:	**polycarbonate, UV-resistant + coated steel basket (92199)**
Material color:	**black mat, similar to RAL9005 (93763)**

Product information

Set : PD2N-BMS-FM DALI-2 + SM socle mounting set IP54 PD2N- / PD4N-FM black mat, similar to RAL9005 + Cover ring PD2N FM black mat, similar to RAL9005 + Wire basket BSK (Ø 200 x 90 mm) white

DALI-2 multisensor (input device)

DALI-2 certified product

Powered via DALI bus

Bright LED indication for commissioning

DALI multimaster technology according to IEC 62386 part 103

Instance 0 provides information regarding occupancy and movement for the DALI-Bus according to IEC 62386 part 303

Instance 1 provides LUX values for the DALI-Bus according to IEC 62386 part 304

Parameterisation is possible via mandatory Multimaster-Application-Controller of any manufacturer. This controller must support IEC 62386 parts 101/103/303/304.

Mixed light measurement with internal and external light sensor

Detection area can be restricted with blinds

Individual adaption of the PIR sensor sensitivity

Status LEDs can be activated / deactivated

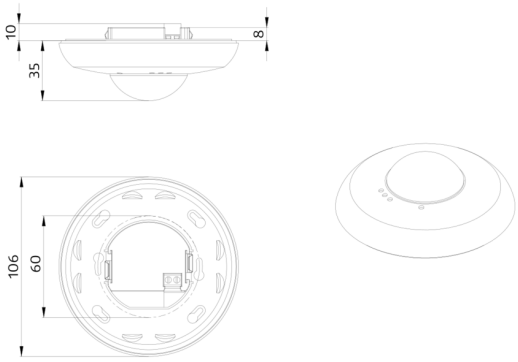
10
8
35
106
60

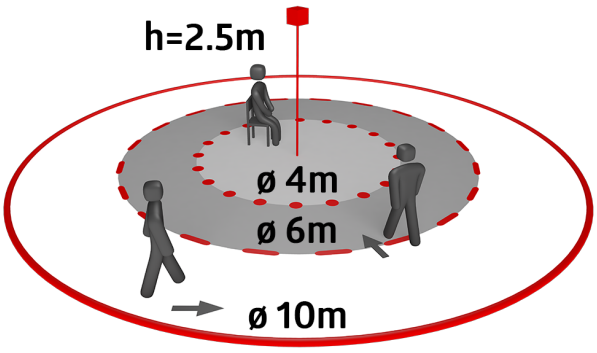
h=2.5m
ø 4m
ø 6m
ø 10m

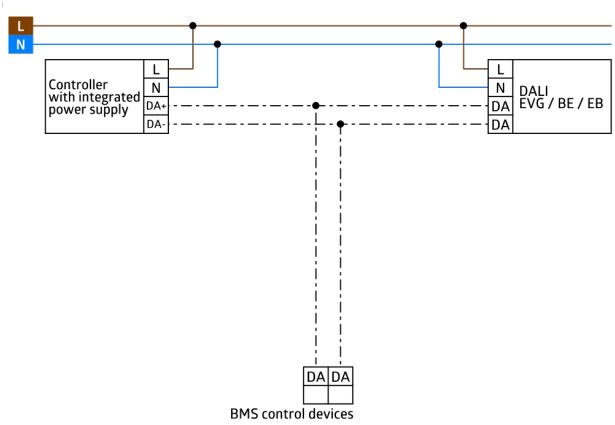
L
N
Controller
with integrated
power supply
L
N
DA+
DA-
L
N
DA
DA
DALI
EVG / BE / EB
DA
DA
BMS control devices

Set items

To receive the bundle according to the technical specification, please order the items listed.



PD2N-BMS-FM DALI-2
Art.No: 93544

Voltage: via DALI Bus, max. 22.5 V DC
Dimensions: Ø 106 x 42 mm
Settings: via DALI-Bus and application which supports DALI multisensors according to IEC62386, parts 101, 103, 303 and 304



SM socle mounting set IP54 PD2N- / PD4N-FM
Art.No: 93753

Dimensions: Ø 109 x 19 mm
Degree / class of protection: IP54
Housing: polycarbonate, UV-resistant

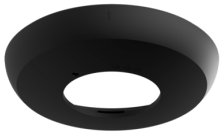

Cover ring PD2N FM
Art.No: 93763

Dimensions: Ø 106 x 20 mm
Impact strength: IK05
Housing: polycarbonate, UV-resistant

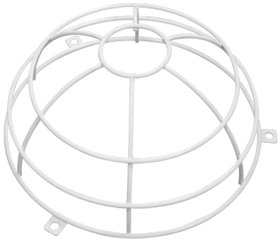

Wire basket BSK (Ø 200 x 90 mm)
Art.No: 92199

Dimensions: Ø 200 x 90 mm
Impact strength: IK09
Housing: coated steel basket