B.E.G. LUXOMAT® net



# PD2N-BMS-FM DALI-2
# Set 93544-93751-93761

DALI-2 (BMS) PIR motion detector with 360° coverage and a range of up to Ø10m (78 m²), DALI-2 input device

## Order data

| Designation | Colour | Art.No |
|---|---|---|
| PD2N-BMS-FM DALI-2 | white | 93544 |
| SM socle mounting set IP54 PD2N- / PD4N-FM | anthracite | 93751 |
| Cover ring PD2N FM | anthracite | 93761 |

## Technical data

| | |
|---|---|
| Voltage: | via DALI Bus, max. 22.5 V DC |
| Dimensions: | **Ø 106 x 42 mm + Ø 109 x 19 mm (93751)** |
| Settings: | via DALI-Bus and application which supports DALI multisensors according to IEC62386, parts 101, 103, 303 and 304 |
| Typ. power input: | 7 mA |
| Settling time: | 200 ms |
| Detection area: | horizontal 360° (Ceiling mounting) |
| Range: | max. Ø 10 m across<br>max. Ø 6 m towards<br>max. Ø 4 m seated |
| Monitored area (tangential movement): | 78 m² / 2.5 m mounting height |
| Mounting height min./max./recommended: | 2 m / 5 m / 2.5 m |
| Degree / class of protection: | **IP20 / Class II + IP54 (93751)** |
| Impact strength: | IK05 |
| Measured light output: | 0 - 4095 Lux, Mixed light measuring |
| Ambient temperature: | -25 °C to +55 °C |
| Housing: | polycarbonate, UV-resistant |
| Material color: | **anthracite mat, similar to RAL7016 (93761)** |

## Product information

Set : PD2N-BMS-FM DALI-2 + SM socle mounting set IP54 PD2N- / PD4N-FM anthracite mat, similar to RAL7016 + Cover ring PD2N FM anthracite mat, similar to RAL7016

DALI-2 multisensor (input device)

DALI-2 certified product

Powered via DALI bus

Bright LED indication for commissioning

DALI multimaster technology according to IEC 62386 part 103

Instance 0 provides information regarding occupancy and movement for the DALI-Bus according to IEC 62386 part 303

Instance 1 provides LUX values for the DALI-Bus according to IEC 62386 part 304

Parameterisation is possible via mandatory Multimaster-Application-Controller of any manufacturer. This controller must support IEC 62386 parts 101/103/303/304.

Mixed light measurement with internal and external light sensor

Detection area can be restricted with blinds

Individual adaption of the PIR sensor sensitivity

Status LEDs can be activated / deactivated

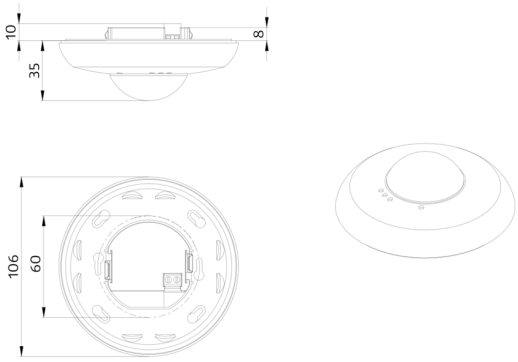
10
8
35
106
60

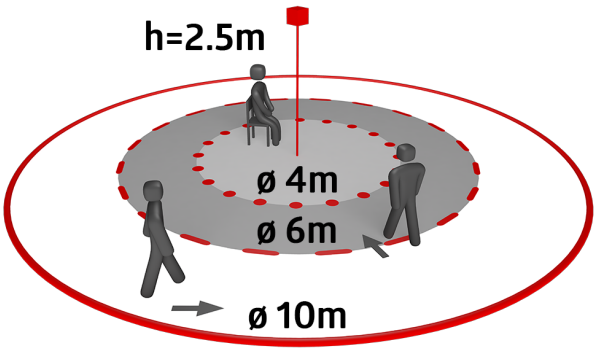
h=2.5m
ø 4m
ø 6m
ø 10m

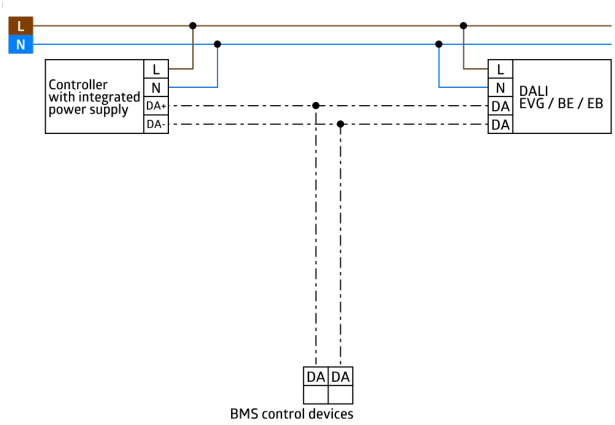
L
N
Controller
with integrated
power supply
L
N
DA+
DA-
L
N
DA
DA
DALI
EVG / BE / EB
DA
DA
BMS control devices

## Set items

To receive the bundle according to the technical specification, please order the items listed.



**PD2N-BMS-FM DALI-2**
Art.No: 93544

Voltage: via DALI Bus, max. 22.5 V DC
Dimensions: Ø 106 x 42 mm
Settings: via DALI-Bus and application which supports DALI multisensors according to IEC62386, parts 101, 103, 303 and 304



**SM socle mounting set IP54 PD2N- / PD4N-FM**
Art.No: 93751

Dimensions: Ø 109 x 19 mm
Degree / class of protection: IP54
Housing: polycarbonate, UV-resistant

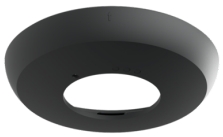

**Cover ring PD2N FM**
Art.No: 93761

Dimensions: Ø 106 x 20 mm
Impact strength: IK05
Housing: polycarbonate, UV-resistant