B.E.G. LUXOMAT®



PD2-M-DIM-SM

92153 EAN: 4007529921539

Occupancy detector for daylight-dependent lighting control

1 – 10 V interface for controlling analog, dimmable ballasts

Orientation light function

Order data

Designation	Colour	Art.No
PD2-M-DIM-SM	white	92153

Accessories

Designation	Colour	Art.No
RC-Arc extinction kit	white	10880
Mini-RC-Arc extinction kit		10882
BLE-IR-Adapter	black	93067
IR-PDim	-	92200
IR-PD-DIM-Mini	-	92098
Wire basket BSK (Ø 200 x 90 mm)	white	92199
SM socket IP54 for PD2- / PD4-SM	white	92161
Wall holder PD4-SM	white	92441
Pendulum mounting set PD2/3/4 SM	white	93179
Pendulum mounting set PD2/3/4 SM	jet black	93193

Areas of application

- entrance halls
- corridors/hallways
- small offices
- open-plan offices
- conference rooms
- classrooms/seminar rooms

Technical data

Voltage:	110 – 240 V AC 50 / 60 Hz
Dimensions:	Ø 98 x 47 mm
Power consumption:	approx. 0.5 W
Detection area:	horizontal 360° (Ceiling mounting)
Range:	max. Ø 10 m across max. Ø 6 m towards max. Ø 4 m seated
Monitored area (tangential movement):	78 m² / 2.5 m mounting height
Mounting height min./max./recommended:	2 m / 5 m / 2.5 m
Degree / class of protection:	IP20 / Class II
Impact strength:	IK05
Ambient temperature:	-25 °C to +50 °C
Housing:	polycarbonate, UV-resistant
Material color:	white mat, similar to RAL9010
Channel 1 (lighting control)	
Switching power:	2300 W, cos φ = 1 1150 VA, cos φ = 0.5 300 W LED, minimum runtime > 5 min max. inrush current Ip (20 ms) = 165 A max. inrush current Ip (200 µs) = 800 A
Type of contact (k):	1x µ-contact, NO contact with tungsten pre-make contact
DIM output:	1-10 V DC, up to 50 ballasts
Follow-up time:	1 min – 30 min
Brightness set value:	10 – 2000 Lux
Light measuring:	Mixed light measuring

Product information

Occupancy detector for daylight-dependent lighting control

1 – 10 V interface for controlling analog, dimmable ballasts

Additional switching channel for the following function: Cut-Off (complete ECG switch-off to avoid standby losses).

Orientation light function

Manual switching and dimming via push button possible

Version as master device

Detection area can be extended by using slave devices

Additional functions can be set up using the optional remote control.

Relay with tungsten pre-make contact, optimised for LED loads

Avoidance of standby losses of the lighting system in accordance with EnEV DIN V 18599-4

Application examples:
entrance halls, corridors/hallways, small offices, open-plan offices, conference rooms, classrooms/seminar rooms

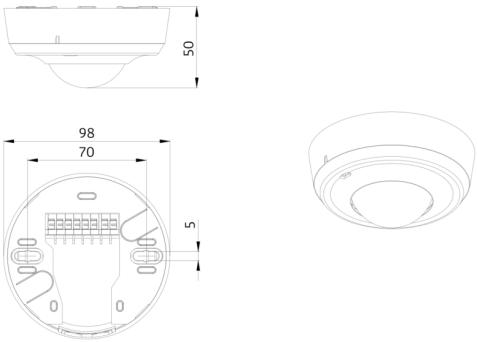
50
98
70
5

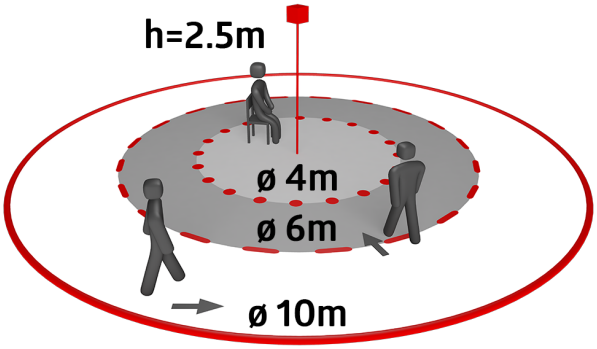
h=2.5m
ø 4m
ø 6m
ø 10m

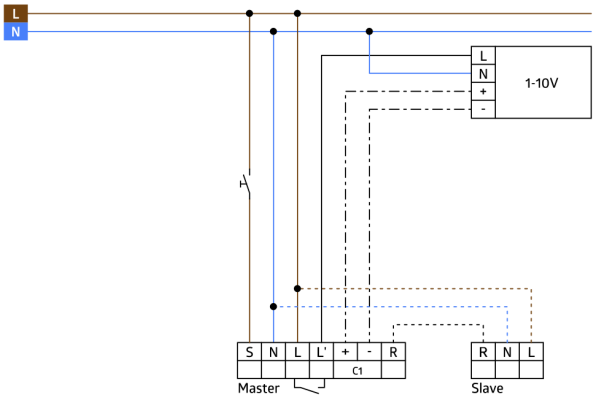
L
N
L
N
+
-
1-10V
S
N
L
L'
+
-
R
C1
Master
R
N
L
Slave

Accessories



RC-Arc extinction kit
Art.No: 10880

Voltage: 230 V AC ±10%
Dimensions: 38 x 12 x 26 mm
Degree / class of protection: IP20 / Class II



Mini-RC-Arc extinction kit
Art.No: 10882

Voltage: 230 V AC ±10%
Dimensions: 50 x 23 x 8 mm
Degree / class of protection: IP20 / Class II



BLE-IR-Adapter
Art.No: 93067

Dimensions: 40 x 55 x 103 mm
Material color: black
Frequency: 2.4 GHz ISM band, GFSK
0.2 dBm + 5.3 dBi = 5.5 dBm



IR-PDim
Art.No: 92200

Battery: 3.0 V Lithium CR2032 (inclusive)
Dimensions: 80 x 60 x 8 mm
Material color: -



IR-PD-DIM-Mini
Art.No: 92098

Battery: 3.0 V Lithium CR2032 (inclusive)
Dimensions: 57 x 35 x 7 mm
Material color: -

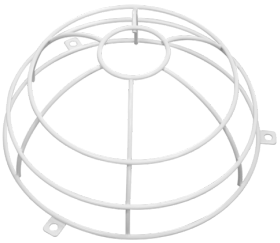

Wire basket BSK (Ø 200 x 90 mm)
Art.No: 92199

Dimensions: Ø 200 x 90 mm
Impact strength: IK09
Housing: coated steel basket



SM socket IP54 for PD2- / PD4-SM
Art.No: 92161

Dimensions: Ø 100 x 15 mm
Degree / class of protection: IP54
Housing: polycarbonate, UV-resistant

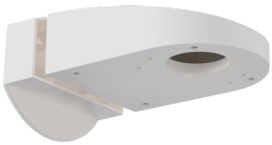

Wall holder PD4-SM
Art.No: 92441

Dimensions: 130 x 100 x 53 mm
Housing: polycarbonate, UV-resistant
Material color: white



Pendulum mounting set PD2/3/4 SM
Art.No: 93179

Dimensions: 1 : Ø 113 x 79 mm, 2 : Ø 113 x 34 mm
Housing: polycarbonate, UV-resistant
Material color: white, similar to RAL9010



Pendulum mounting set PD2/3/4 SM
Art.No: 93193

Dimensions: 1 : Ø 113 x 79 mm, 2 : Ø 113 x 34 mm
Housing: polycarbonate, UV-resistant
Material color: jet black, similar to RAL9005