B.E.G. LUXOMAT®



PD2-M-DALI/DSI-SM

92280 EAN: 4007529922802

Occupancy detector for daylight-dependent lighting control

DALI / DSI interface for control of digital dimmable electronic ballasts as a group

Manual switching and dimming via push button possible

Order data

Designation	Colour	Art.No
PD2-M-DALI/DSI-SM	white	92280

Accessories

Designation	Colour	Art.No
BLE-IR-Adapter	black	93067
IR-PD-DALI	-	92094
IR-PD-DALI-E	-	92122
IR-PD-DALI-Mini	-	92112
Wire basket BSK (Ø 200 x 90 mm)	white	92199
Wall holder PD4-SM	white	92441
SM socket IP54 for PD2- / PD4-SM	white	92161

Areas of application

- entrance halls
- small offices
- corridors/hallways
- open-plan offices
- conference rooms
- classrooms/seminar rooms

Technical data

Voltage:	110 – 240 V AC 50 / 60 Hz
Dimensions:	Ø 98 x 47 mm
Power consumption:	approx. 1 W
Detection area:	horizontal 360° (Ceiling mounting)
Range:	max. Ø 10 m across max. Ø 6 m towards max. Ø 4 m seated
Monitored area (tangential movement):	78 m² / 2.5 m mounting height
Mounting height min./max./recommended:	2 m / 5 m / 2.5 m
Degree / class of protection:	IP20 / Class II
Ambient temperature:	-25 °C to +50 °C
Housing:	polycarbonate, UV-resistant
Material color:	white mat, similar to RAL9010
Channel 1 (lighting control)	
DALI output:	up to 50 DALI / DSI-EB
Follow-up time:	1 min – 30 min
Orientation light:	10 – 30 % / OFF / 5 min – 60 min / ∞
Brightness set value:	10 – 2000 Lux
Light measuring:	Mixed light measuring

Product information

Occupancy detector for daylight-dependent lighting control

DALI / DSI interface for control of digital dimmable electronic ballasts as a group

Manual switching and dimming via push button possible

Switching between DALI and DSI programming possible with DIP switch and remote control

Version as master device

Detection area can be extended by using slave devices

Additional functions can be set up using the optional remote control.

Orientation light function

Semi-automatic, full-automatic or twilight switch mode

Factory settings 10 min and 500 lux

Application examples:
entrance halls, small offices, corridors/hallways, open-plan offices, conference rooms, classrooms/seminar rooms

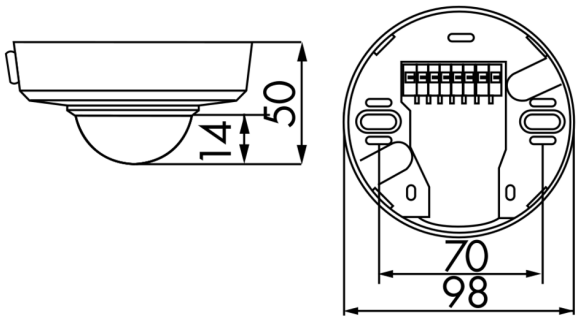
14
50
70
98

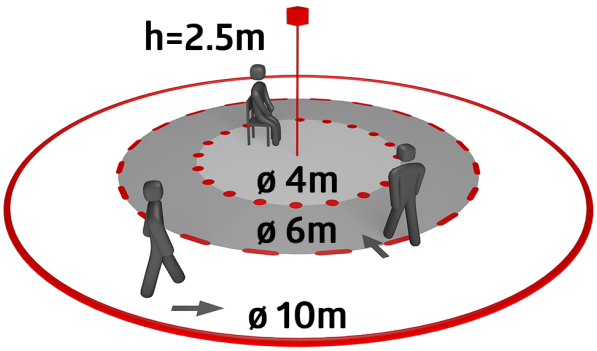
h=2.5m
ø 4m
ø 6m
ø 10m

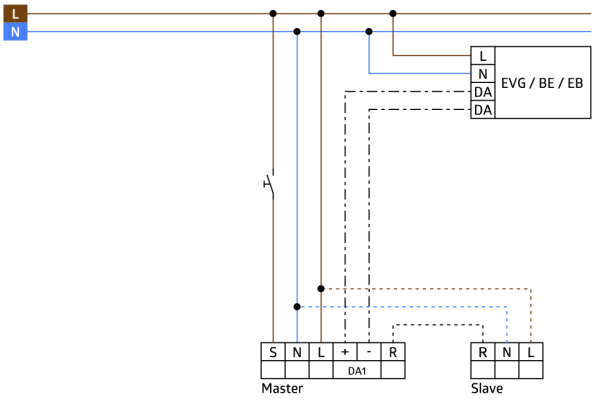
L
N
L
N
DA
DA
EVG / BE / EB
S N L + - R
DA1
Master
R N L
Slave

Accessories



BLE-IR-Adapter
Art.No: 93067

Dimensions: 40 x 55 x 103 mm
Material color: black
Frequency: 2.4 GHz ISM band, GFSK 0.2 dBm + 5.3 dBi = 5.5 dBm

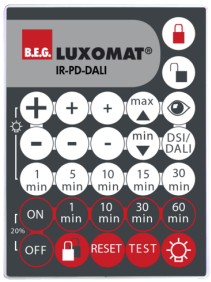

IR-PD-DALI
Art.No: 92094

Battery: 3.0 V Lithium CR2032 (inclusive)
Dimensions: 80 x 60 x 8 mm
Material color: -



IR-PD-DALI-E
Art.No: 92122

Battery: 3.0 V Lithium CR2032 (inclusive)
Dimensions: 80 x 60 x 8 mm
Material color: -



IR-PD-DALI-Mini
Art.No: 92112

Battery: 3.0 V Lithium CR2032 (inclusive)
Dimensions: 57 x 35 x 7 mm
Material color: -

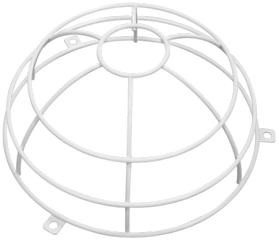

Wire basket BSK (Ø 200 x 90 mm)
Art.No: 92199

Dimensions: Ø 200 x 90 mm
Impact strength: IK09
Housing: coated steel basket

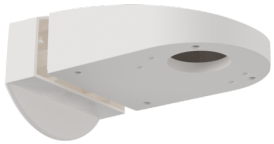

Wall holder PD4-SM
Art.No: 92441

Dimensions: 130 x 100 x 53 mm
Housing: polycarbonate, UV-resistant
Material color: white



SM socket IP54 for PD2- / PD4-SM
Art.No: 92161

Dimensions: Ø 100 x 15 mm
Degree / class of protection: IP54
Housing: polycarbonate, UV-resistant