B.E.G. LUXOMAT®



PD2-M-2C-12-48V-RR-FC
Set 92306-92199-93085

12–48 V 2-channel PIR motion detector with 360° coverage and a range of up to Ø10m (78 m²), remote-controlled and equipped with a reed relay

Order data

Designation	Colour	Art.No
PD2-M-2C-12-48V-RR-FC	white	92306
Wire basket BSK (Ø 200 x 90 mm)	white	92199
Cover ring PD2/PD3 FC		93085

Areas of application

- corridors/hallways
- toilets
- equipment rooms
- small offices
- open-plan offices
- conference rooms

Technical data

Voltage:	12 – 48 V AC / DC
Dimensions:	**Ø 200 x 90 mm (92199)**
Power consumption:	< 1 W
Detection area:	horizontal 360° (Ceiling mounting)
Range:	max. Ø 10 m across max. Ø 6 m towards max. Ø 4 m seated
Monitored area (tangential movement):	78 m² / 2.5 m mounting height
Mounting height min./max./recommended:	2 m / 5 m / 2.5 m
Degree / class of protection:	IP20 / Class II
Impact strength:	**IK09 (92199)**
Ambient temperature:	-25 °C to +50 °C
Housing:	**polycarbonate, UV-resistant + coated steel basket (92199)**
Material color:	**jet black glossy, similar to RAL9005 (93085)**
Channel 1 (lighting control, potential-free (dry))	
Switching power:	0.1 A; cos φ = 1 with Reed relay
Type of contact (k):	1x µ-contact, dry NO contact
Follow-up time:	15 sec – 30 min, Pulse
Brightness set value:	10 – 2000 Lux
Channel 2 (HVAC control potential-free (dry))	
Switching power:	0.1 A; cos φ = 1 with Reed relay
Type of contact:	1x µ-contact, dry NO contact
Follow-up time:	5 min – 120 min, Alarm pulse, Pulse
Light measuring:	Mixed light measuring

Product information

Set : PD2-M-2C-12-48V-RR-FC + Wire basket BSK (Ø 200 x 90 mm) white + Cover ring PD2/PD3 FC jet black glossy, similar to RAL9005

Occupancy detector with operating voltage of 12-48 V

Two potential-free (dry) channels

Can be used as either Master device or Slave device

Manual switching via push-button possible

Additional functions can be set up using the optional remote control.

Factory settings 10 min and 500 lux (15 min HVAC)

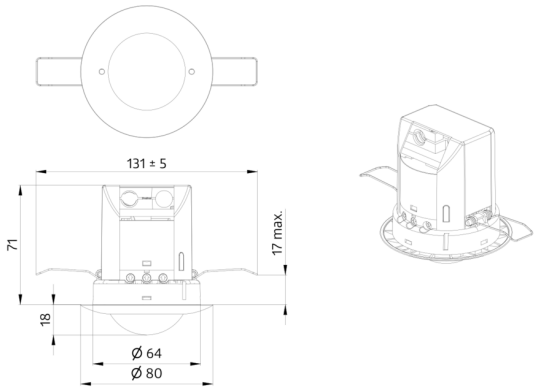
131 ± 5
71
17 max.
18
Ø 64
Ø 80

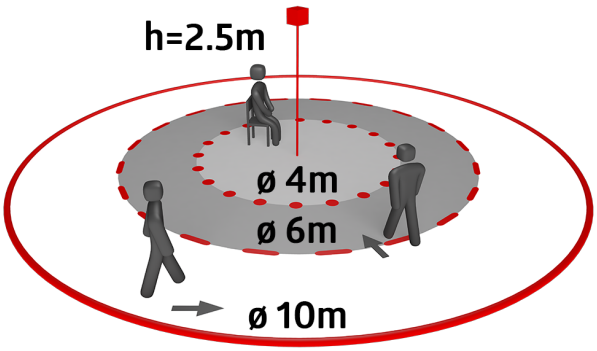
h=2.5m
ø 4m
ø 6m
ø 10m

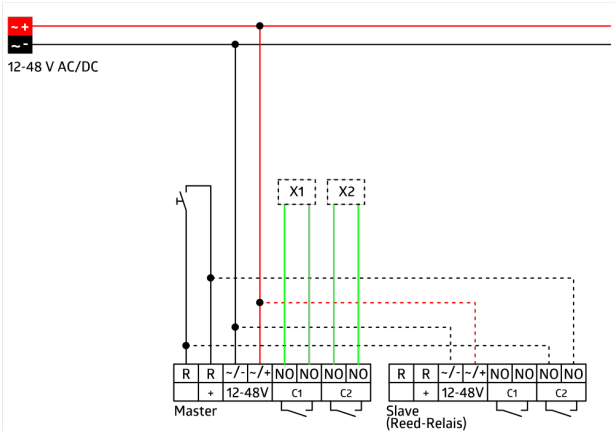
12-48 V AC/DC
X1
X2
R
R
-/-
-/+
NO
NO
NO
NO
+
12-48V
C1
C2
Master
Slave
(Reed-Relais)

Set items

To receive the bundle according to the technical specification, please order the items listed.



PD2-M-2C-12-48V-RR-FC
Art.No: 92306

Voltage: 12 – 48 V AC / DC
Dimensions: Ø 80 x 85 mm
Power consumption: < 1 W

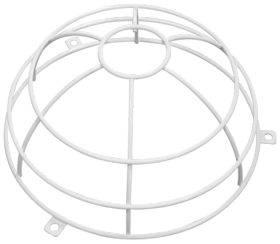

Wire basket BSK (Ø 200 x 90 mm)
Art.No: 92199

Dimensions: Ø 200 x 90 mm
Impact strength: IK09
Housing: coated steel basket



Cover ring PD2/PD3 FC
Art.No: 93085

Dimensions: Ø 84 x 9 mm
Housing: polycarbonate, UV-resistant
Material color: jet black glossy, similar to RAL9005