B.E.G. LUXOMAT® net



PD11-LTMS-RR-FC Set 92594-92537

LTMS PIR multisensor with 360° detection and a range of up to Ø9m (63 m²), remote-controlled, light, temperature, and motion sensor

Order data

Designation	Colour	Art.No
PD11-LTMS-RR-FC	white	92594
Cover ring PD11 (52 mm)	black	92537

Technical data

Voltage:	16 – 48 V DC
Dimensions:	**Ø 52 x 60 mm + Ø 52 x 3 mm (92537)**
Power consumption:	approx. 0.4 W
Detection area:	horizontal 360° (Ceiling mounting)
Range:	max. Ø 9 m across max. Ø 6 m towards max. Ø 3 m seated
Monitored area (tangential movement):	63 m² / 2.5 m mounting height
Mounting height min./max./recommended:	2 m / 5 m / 2.5 m
Degree / class of protection:	IP20 / Class II
Impact strength:	IK02
Measured light output:	0 – 1000 Lux, 0-10 V, approx. 10 mV/ Lux
Ambient temperature:	0 °C to +50 °C
Temperatur Ausgabe:	0 °C – +50 °C, 0-10 V, approx. 200 mV/°C
Housing:	polycarbonate, UV-resistant
Material color:	**black, similar to RAL9005 (92537)**
Channel 1 (lighting control, potential-free (dry))	
Switching power:	48 V DC / 0.1 A , cos φ = 1
Type of contact (k):	µ-contact, dry NO contact
Follow-up time:	5 sec – 60 min
Light measuring:	Mixed light measuring

Product information

Set : PD11-LTMS-RR-FC + Cover ring PD11 (52 mm) black, similar to RAL9005

Super flat multi-sensor for acquisition of data concerning occupancy (presence), temperature, and brightness

For integration into proprietary bus system

Output of motion detection via switch contact

Output of current light and temperature values as analogue voltage

Spring clips for quick and easy installation in suspended ceilings

Includes blinds and clamp ring for installation into light fittings

With accessories for flush-mounting in ceiling and exposed concrete

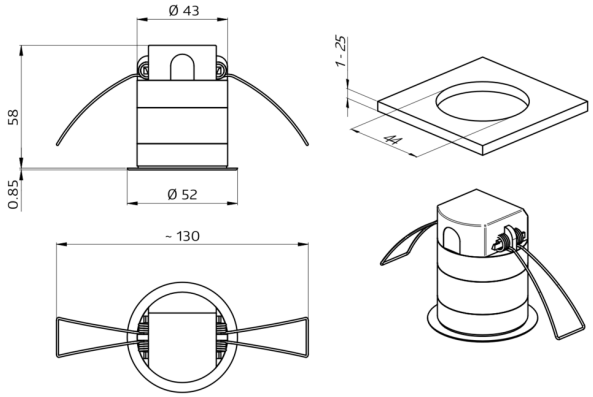
Ø 43
58
0.85
Ø 52
~ 130
1.25
44

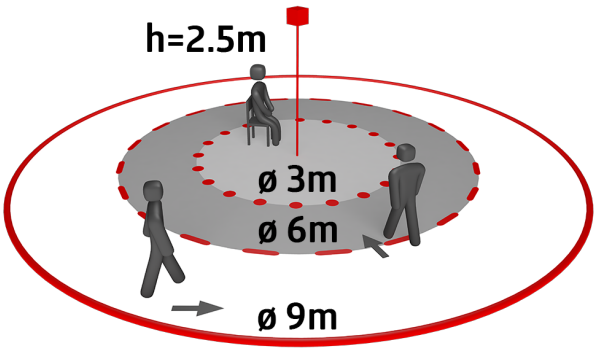
h=2.5m
ø 3m
ø 6m
ø 9m

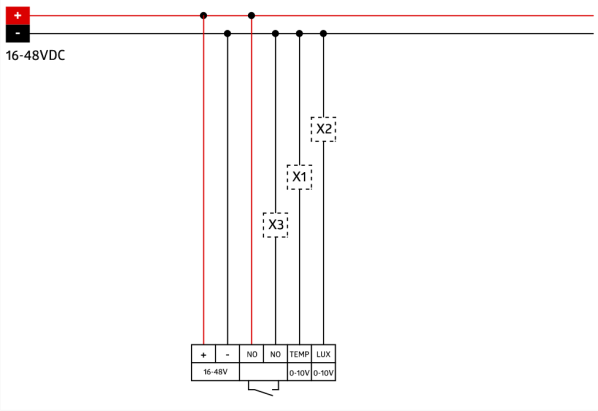
+
-
16-48VDC
X2
X1
X3
+
-
NO
NO
TEMP
LUX
16-48V
0-10V
0-10V

Set items

To receive the bundle according to the technical specification, please order the items listed.



PD11-LTMS-RR-FC
Art.No: 92594

Voltage: 16 – 48 V DC
Dimensions: Ø 52 x 60 mm
Power consumption: approx. 0.4 W

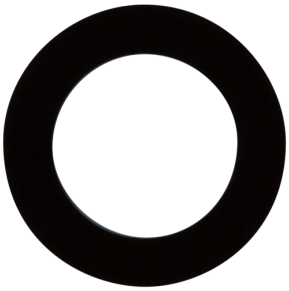

Cover ring PD11 (52 mm)
Art.No: 92537

Dimensions: Ø 52 x 3 mm
Housing: polycarbonate, UV-resistant
Material color: black, similar to RAL9005