B.E.G. LUXOMAT® net



PD11-KNXs-FLAT-DX-FC
Set 93523-92833-92692

KNX PIR Motion Sensor (Deluxe) with 360° detection and a range of up to Ø9m (63 m²)

Order data

Designation	Colour	Art.No
PD11-KNXs-FLAT-DX-FC	white	93523
In-wall mounting set / PD11	white	92833
Cover ring PD11	white	92692

Technical data

Voltage:	via KNX BUS
Dimensions:	**Ø 52 x 48 mm + Ø 104 mm (92833) + Ø 100 x 3 mm (92692)**
Typ. power input:	12 mA
Detection area:	horizontal 360° (Ceiling mounting)
Range:	max. Ø 9 m across max. Ø 6 m towards max. Ø 3 m seated
Monitored area (tangential movement):	63 m² / 2.5 m mounting height
Mounting height min./max./recommended:	2 m / 5 m / 2.5 m
Degree / class of protection:	IP54 / Class III
Impact strength:	IK02
Ambient temperature:	-25 °C to +55 °C
Temperature measurement range:	-5 °C to +45 °C
Housing:	polycarbonate, UV-resistant
Material color:	**white mat, similar to RAL9010 (92692)**
Number of light sensors:	1
Number of PIR sensors:	1
KNX TP 256:	Yes
KNX Secure:	Yes
Orientation light:	5 – 100 % / OFF / 1 min – 255 min
Night light:	5 – 100 %
Brightness set value:	5 – 2000 Lux

Product information

Set : PD11-KNXs-FLAT-DX-FC + In-wall mounting set / PD11 white + Cover ring PD11 white mat, similar to RAL9010

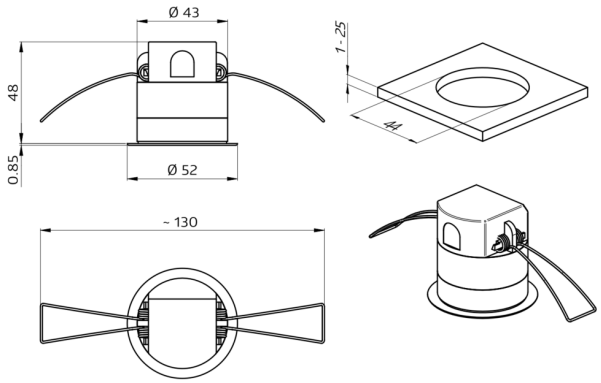
Ø 43
48
0.85
Ø 52
1 - 25
44
~ 130

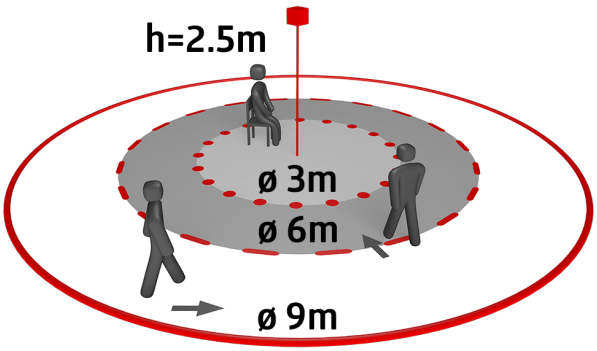
h=2.5m
ø 3m
ø 6m
ø 9m

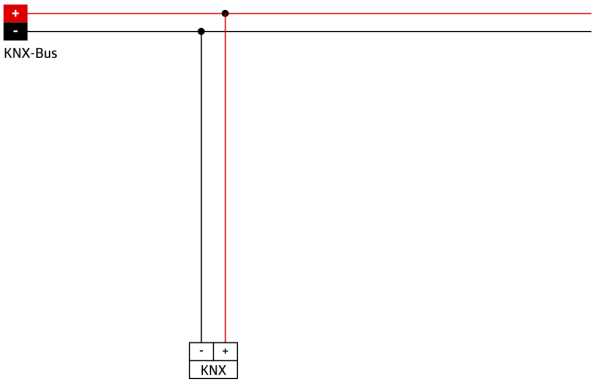
+
-
KNX-Bus
-
+
KNX

Set items

To receive the bundle according to the technical specification, please order the items listed.



PD11-KNXs-FLAT-DX-FC
Art.No: 93523

Voltage: via KNX BUS
Dimensions: Ø 52 x 48 mm
Typ. power input: 12 mA



In-wall mounting set / PD11
Art.No: 92833

Dimensions: Ø 104 mm
Material color: white

Cover ring PD11
Art.No: 92692

Dimensions: Ø 100 x 3 mm
Housing: polycarbonate, UV-resistant
Material color: white mat, similar to RAL9010