B.E.G. LUXOMAT® net



PD11-DALI-SYS-FLAT-FC

92731 EAN: 4007529927319

DALI-SYS PIR multisensor with 360° detection and a range of up to Ø9m (63 m²), for integration into DALI-SYS systems

Order data

Designation	Colour	Art.No
PD11-DALI-SYS-FLAT-FC	white	92731

Accessories

Designation	Colour	Art.No
IR-PD-DALI-Mini	-	92112
In-wall mounting set / PD11	white	92833
Cover ring PD11 (52 mm)	black	92537
Cover ring PD11	white	92692
Square design frame PD11-FC	white	92994
Surface mounting socket PD11	white	92121

Technical data

Voltage:	via DALI Bus, max. 22.5 V DC
Dimensions:	Ø 52 x 48 mm
Settings:	B.E.G. PC Tools, B.E.G. DALI-SYS router
Typ. power input:	7 mA
Detection area:	horizontal 360° (Ceiling mounting)
Range:	max. Ø 9 m across max. Ø 6 m towards max. Ø 3 m seated
Monitored area (tangential movement):	63 m² / 2.5 m mounting height
Mounting height min./max./recommended:	2 m / 5 m / 2.5 m
Degree / class of protection:	IP20 / Class II
Impact strength:	IK02
Ambient temperature:	-25 °C to +50 °C
Housing:	polycarbonate, UV-resistant
Material color:	white mat, similar to RAL9010
Follow-up time:	1 sec – 120 min
Orientation light:	5 – 100 % / 1 min – 120 min / ∞
Brightness set value:	10 – 2500 Lux

Product information

Low profile DALI multisensor (visible height: 0,85 mm)

Powered via DALI bus

Seemless integration in B.E.G. LUXOMAT®net DALI-SYS

Detection area can be extended thanks to master-slave-mode

Semi-automatic, full-automatic or twilight switch mode

Integrated daylight harvesting circuit (or switch output)

Guided Light, Soft-Start PLUS, Orientation light PLUS

Works out-of-the box for easy installation check

Full range of functions can only be activated with other products of the product group B.E.G. LUXOMAT®net DALI-SYS

Spring clips for quick and easy installation in suspended ceilings

Includes blinds and clamp ring for installation into light fittings

Flush mounting with accessory 92833, surface mounting with accessories 92833 and 92121

This article is a component of a lighting control system from B.E.G., which supports the use of DALI control gear (luminaires, relays) from other manufacturers

The use of DALI application controllers from other manufacturers is not supported

The use of DALI input devices (sensors, push-buttons) from other manufacturers is not supported

Additional system components (hardware) from B.E.G. are required

Additional services (planning, commissioning and maintenance) from B.E.G. are required

Application examples:
underground car parks, entrance halls, corridors/hallways, staircases, small offices, open-plan offices, conference rooms

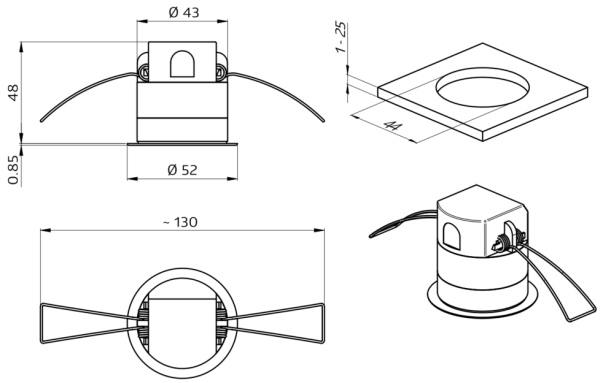
Ø 43
48
0.85
Ø 52
1 - 25
44
~ 130

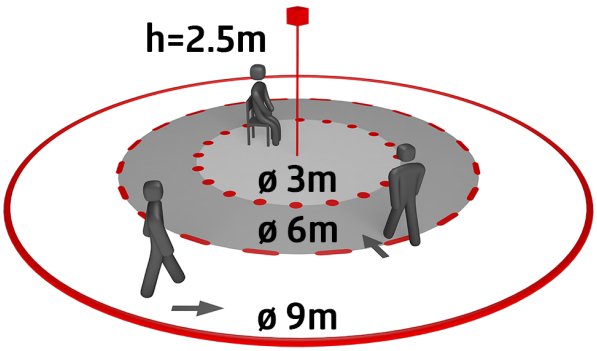
h=2.5m
ø 3m
ø 6m
ø 9m

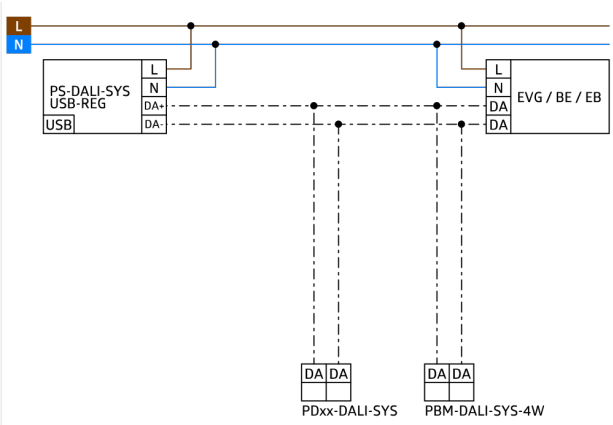
L
N
PS-DALI-SYS
USB-REG
USB
L
N
DA+
DA-
L
N
DA
DA
EVG / BE / EB
DA DA
PDxx-DALI-SYS
DA DA
PBM-DALI-SYS-4W

Accessories



IR-PD-DALI-Mini
Art.No: 92112

Battery: 3.0 V Lithium CR2032 (inclusive)
Dimensions: 57 x 35 x 7 mm
Material color: -



In-wall mounting set / PD11
Art.No: 92833

Dimensions: Ø 104 mm
Material color: white

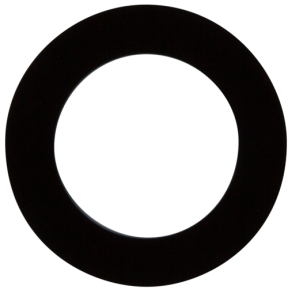

Cover ring PD11 (52 mm)
Art.No: 92537

Dimensions: Ø 52 x 3 mm
Housing: polycarbonate, UV-resistant
Material color: black, similar to RAL9005

Cover ring PD11
Art.No: 92692

Dimensions: Ø 100 x 3 mm
Housing: polycarbonate, UV-resistant
Material color: white mat, similar to RAL9010

Square design frame PD11-FC
Art.No: 92994

Dimensions: 54 x 54 x 2.6 mm
Housing: polycarbonate, UV-resistant
Material color: white mat, similar to RAL9010



Surface mounting socket PD11
Art.No: 92121

Degree / class of protection: IP54
Housing: polycarbonate, UV-resistant
Material color: white