B.E.G. LUXOMAT® net




# PD11-BMS-FLAT-FC
# DALI-2 Set 93542-92994

DALI-2 (BMS) PIR multisensor with 360° detection and a range of up to Ø9m (63 m²), DALI-2 input device

## Order data

| Designation | Colour | Art.No |
|---|---|---|
| PD11-BMS-FLAT-FC DALI-2 | white | 93542 |
| Square design frame PD11-FC | white | 92994 |

## Technical data

| | |
|---|---|
| Voltage: | via DALI Bus, max. 22.5 V DC |
| Dimensions: | **Ø 52 x 48 mm + 54 x 54 x 2.6 mm (92994)** |
| Settings: | via DALI-Bus and application which supports DALI multisensors according to IEC62386, parts 101, 103, 303 and 304 |
| Typ. power input: | 7 mA |
| Settling time: | 200 ms |
| Detection area: | horizontal 360° (Ceiling mounting) |
| Range: | max. Ø 9 m across<br>max. Ø 6 m towards<br>max. Ø 3 m seated |
| Monitored area (tangential movement): | 63 m² / 2.5 m mounting height |
| Mounting height min./max./recommended: | 2 m / 5 m / 2.5 m |
| Degree / class of protection: | IP20 / Class II |
| Impact strength: | IK02 |
| Measured light output: | 0 - 4095 Lux, Mixed light measuring |
| Ambient temperature: | -25 °C to +50 °C |
| Housing: | polycarbonate, UV-resistant |
| Material color: | **white mat, similar to RAL9010 (92994)** |

## Product information

Set : PD11-BMS-FLAT-FC DALI-2 + Square design frame PD11-FC white mat, similar to RAL9010

Low profile DALI-2 multisensor (input device) having a visible height of only 0.85 mm

DALI-2 certified product

Powered via DALI bus

DALI multimaster technology according to IEC 62386 part 103

Instance 0 provides information regarding occupancy and movement for the DALI-Bus according to IEC 62386 part 303

Instance 1 provides LUX values for the DALI-Bus according to IEC 62386 part 304

Parameterisation is possible via mandatory Multimaster-Application-Controller of any manufacturer. This controller must support IEC 62386 parts 101/103/303/304.

Spring clips for quick and easy installation in suspended ceilings

Includes blinds and clamp ring for installation into light fittings

With accessories for flush-mounting in ceiling and exposed concrete

Individual adaption of the PIR sensor sensitivity

Status LEDs can be activated / deactivated

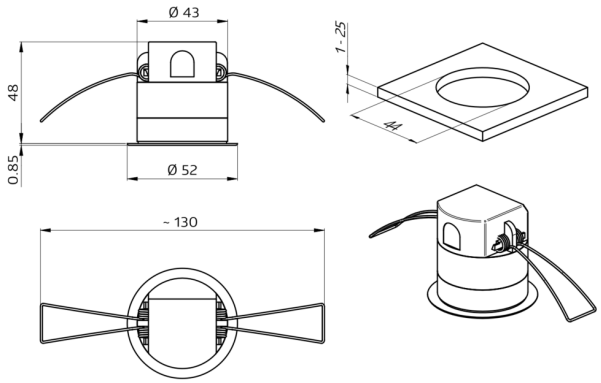
Ø 43
48
0.85
Ø 52
1 - 25
44
~ 130

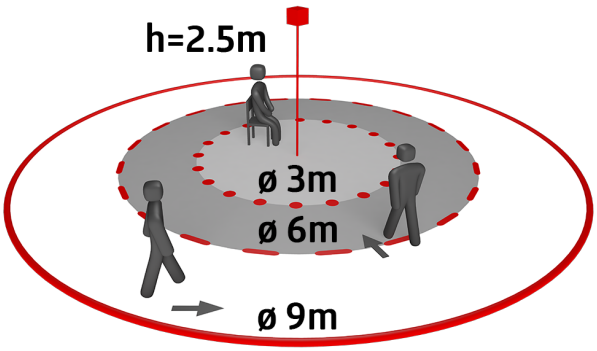
h=2.5m
ø 3m
ø 6m
ø 9m

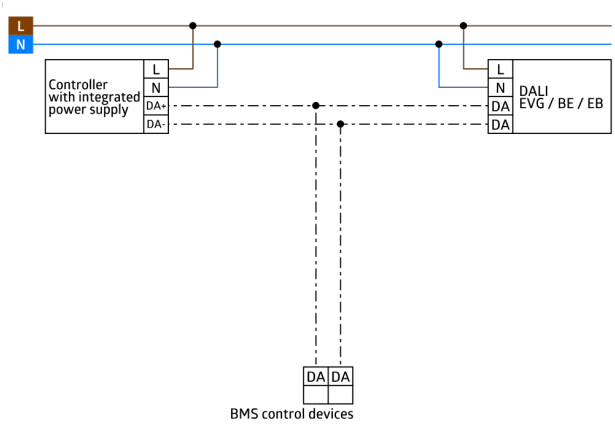
L
N
Controller
with integrated
power supply
L
N
DA+
DA-
L
N
DA
DA
DALI
EVG / BE / EB
DA
DA
BMS control devices

## Set items

To receive the bundle according to the technical specification, please order the items listed.



**PD11-BMS-FLAT-FC DALI-2**
Art.No: 93542

Voltage: via DALI Bus, max. 22.5 V DC
Dimensions: Ø 52 x 48 mm
Settings: via DALI-Bus and application which supports DALI multisensors according to IEC62386, parts 101, 103, 303 and 304



**Square design frame PD11-FC**
Art.No: 92994

Dimensions: 54 x 54 x 2.6 mm
Housing: polycarbonate, UV-resistant
Material color: white mat, similar to RAL9010