B.E.G. LUXOMAT® net



PBM-DALI-LINK-4W-BLE

92732 EAN: 4007529927326

DALI-LINK flush-mounted push-button module with 4 freely configurable inputs for dry contacts and an integrated Bluetooth gateway for app-based setup.

Order data

Designation	Colour	Art.No
PBM-DALI-LINK-4W-BLE	-	92732

Technical data

Voltage:	via DALI Bus, max. 22.5 V DC
Dimensions:	38 x 38 x 14 mm
Settings:	Smartphone with DALI-LINK App (iOS / Android)
Typ. power input:	7 mA
Degree / class of protection:	IP20 / Class II
Ambient temperature:	-25 °C to +50 °C
Housing:	Polycarbonate
Material color:	-
Cable length:	max. 50 cm
Follow-up time:	1 min – 150 min (staircase mode only)
Frequency:	2.4 GHz ISM band, GFSK 3 dBm

Product information

DALI pushbutton module with 4 binary inputs and integrated Bluetooth gateway for hidden mounting behind flush mount switches.

Parameterisation of the DALI-LINK solution via Bluetooth with a smartphone and the B.E.G. DALI-LINK App.

4 inputs for conventional push buttons, freely configurable

Operating modes: Standard, staircase or scene mode

Integrated buzzer to determine location of installed device

Full range of functions can only be activated with other products of the product group B.E.G. LUXOMAT®net DALI-LINK

Android - https://play.google.com/store/apps/details?id=com.elpla.beglbl e
iOS - https://itunes.apple.com/de/app/b-e-g-luxomatnet-dali-link/id1342462121

This article is a component of a lighting control system from B.E.G., which supports the use of DALI control gear (luminaires, relays) from other manufacturers

The use of DALI application controllers from other manufacturers is not supported

The use of DALI input devices (sensors, push-buttons) from other manufacturers is not supported

Additional system components (hardware) from B.E.G. are required

Additional free software from B.E.G. is required

Suitable for: 93840, 93845, ...

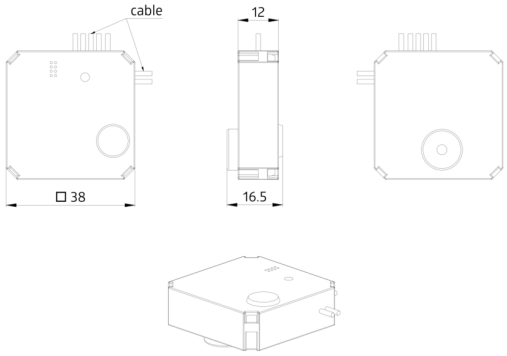
cable
12
□ 38
16.5

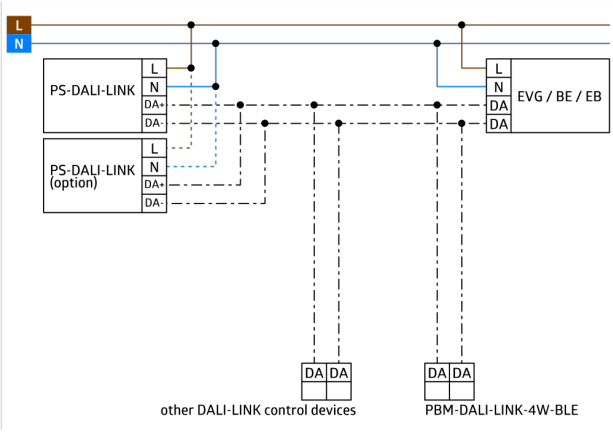
L
N
PS-DALI-LINK
L
N
DA+
DA-
PS-DALI-LINK (option)
L
N
DA+
DA-
L
N
DA
DA
EVG / BE / EB
DA DA
other DALI-LINK control devices
DA DA
PBM-DALI-LINK-4W-BLE