B.E.G. LUXOMAT® net

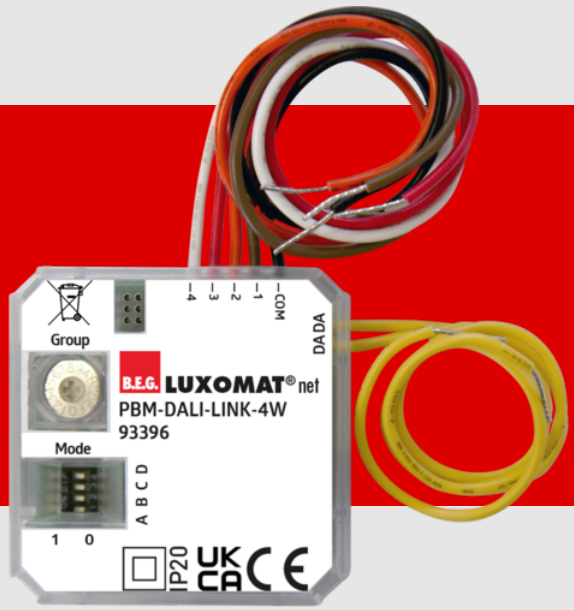

PBM-DALI-LINK-4W

93396 EAN: 4007529933969

DALI-LINK flush-mounted push-button module with four freely configurable inputs for dry contacts, switchable between normal, staircase, and scene modes.

Order data

Designation	Colour	Art.No
PBM-DALI-LINK-4W	white	93396

Technical data

Voltage:	via DALI Bus, max. 22 V
Dimensions:	38 x 38 x 12 mm
Settings:	via DIP switch, HEX switch, B.E.G. BLE App
Typ. power input:	7 mA
Ambient temperature:	-25 °C to +50 °C
Housing:	polycarbonate, UV-resistant
Material color:	white
Cable length:	50 cm
Follow-up time:	1 min – 150 min (staircase mode only)

Product information

Binary DALI input device for installation in in-wall sockets

4 inputs for conventional push buttons, freely configurable

Operating modes: Standard, staircase or scene mode

Integrated LED to determine location of dismantled device

Integrated buzzer to determine location of installed device

DIP- and HEX-switch for quick commissioning with basic functionality

Full range of functions can only be activated with other products of the product group B.E.G. LUXOMAT®net DALI-LINK

This article is a component of a lighting control system from B.E.G., which supports the use of DALI control gear (luminaires, relays) from other manufacturers

The use of DALI application controllers from other manufacturers is not supported

The use of DALI input devices (sensors, push-buttons) from other manufacturers is not supported

Additional system components (hardware) from B.E.G. are required

Additional free software from B.E.G. is required

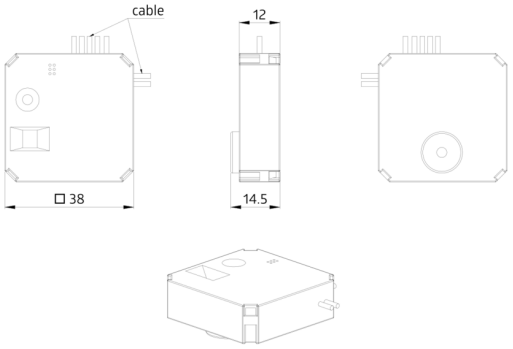
cable
12
□ 38
14.5

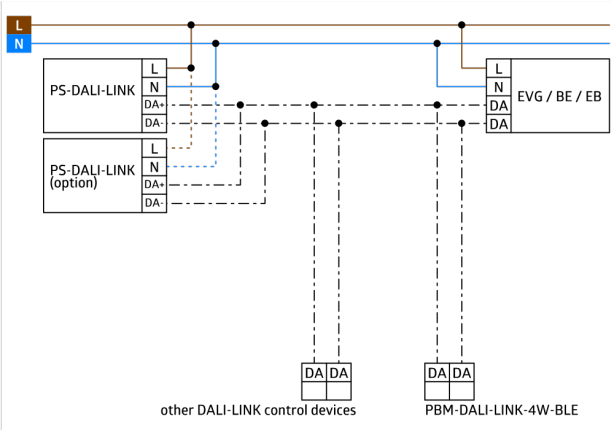
L
N
PS-DALI-LINK
L
N
DA+
DA-
PS-DALI-LINK (option)
L
N
DA+
DA-
L
N
DA
DA
EVG / BE / EB
DA DA
other DALI-LINK control devices
DA DA
PBM-DALI-LINK-4W-BLE