B.E.G. LUXOMAT®



Outside corner socket RC-plus next

97024 EAN: 4007529970247

- Dimensions: Ø 71 x 34 mm
- Degree / class of protection: IP54
- Housing: polycarbonate, UV-resistant

Order data

Designation	Colour	Art.No
Outside corner socket RC-plus next	black	97024

Technical data

Dimensions:	Ø 71 x 34 mm
Degree / class of protection:	IP54
Housing:	polycarbonate, UV-resistant
Material color:	black mat, similar to RAL9005

Product information

Socket for outside corner mounting of the RC-plus next motion detectors. As accessory with RC-plus next 130 and RC-plus next 230. RC-plus next 280 comes complete with the socket.

Suitable for: 93321, 93323, 93324, 93331, 93333, 93334, 93341, 93343, 93344, 93346, 93527, 93528, ...

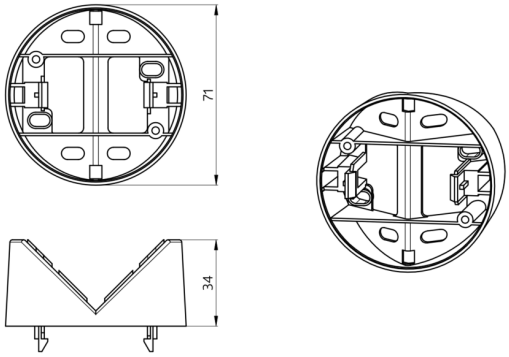
71
34