B.E.G. LUXOMAT® net



LC-plus-DALI-SYS 280
Set 93308-93220

DALI-SYS PIR Outdoor Multisensor with 280° detection and a range of up to 16 m (620 m²), for integration into DALI-SYS systems

Order data

Designation	Colour	Art.No
LC-plus-DALI-SYS 280	white	93308
Pole holder	stainless steel	93220

Technical data

Voltage:	via DALI Bus, max. 22.5 V DC
Dimensions:	110 x 68 x 78 mm
Settings:	B.E.G. PC Tools, B.E.G. DALI-SYS router
Typ. power input:	7 mA
Detection area:	horizontal 280° (Wall mounting)
Range:	max. 16 m across max. 9 m towards
Monitored area (tangential movement):	620 m² / 2.5 m mounting height
Mounting height min./max./recommended:	2 m / 3 m / 2.5 m
Degree / class of protection:	IP54 / Class II
Impact strength:	IK02
Ambient temperature:	-25 °C to +50 °C
Housing:	polycarbonate, UV-resistant
Material color:	white mat, similar to RAL9010
Follow-up time:	1 sec – 120 min
Orientation light:	5 – 100 % / 1 s – 120 min
Brightness set value:	10 – 2500 Lux

Product information

Set : LC-plus-DALI-SYS 280 + Pole holder stainless steel

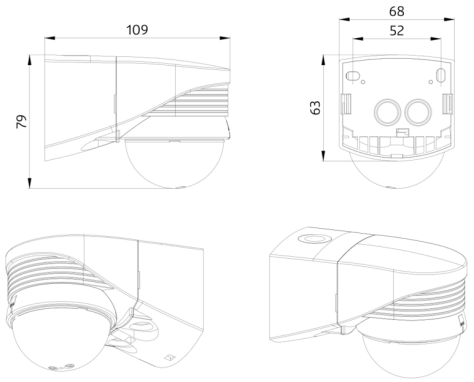
109
79
68
52
63

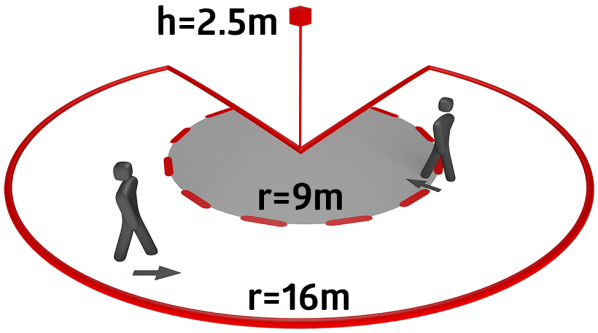
h=2.5m
r=9m
r=16m

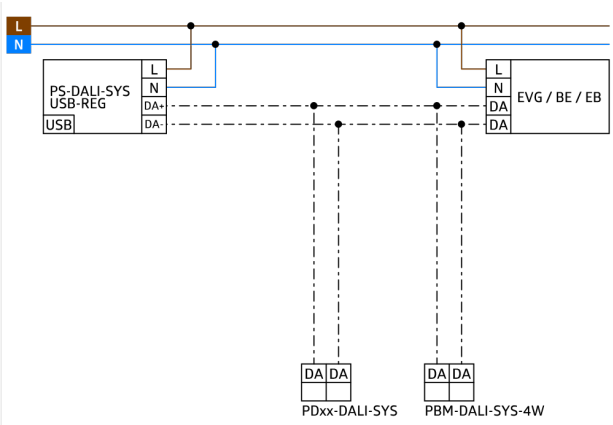
L
N
PS-DALI-SYS
USB-REG
USB
L
N
DA+
DA-
L
N
DA
DA
EVG / BE / EB
DA DA
PDxx-DALI-SYS
DA DA
PBM-DALI-SYS-4W

Set items

To receive the bundle according to the technical specification, please order the items listed.



LC-plus-DALI-SYS 280
Art.No: 93308

Voltage: via DALI Bus, max. 22.5 V DC
Dimensions: 110 x 68 x 78 mm
Settings: B.E.G. PC Tools, B.E.G. DALI-SYS router

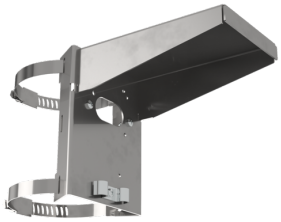

Pole holder
Art.No: 93220

Dimensions: 188 x 98 x 134 mm
Housing: stainless steel
Material color: stainless steel