B.E.G. LUXOMAT® net



LC-plus-DALI-SYS 280

93308 EAN: 4007529933082

DALI-SYS PIR Outdoor Multisensor with 280° detection and a range of up to 16 m (620 m²), for integration into DALI-SYS systems

Order data

Designation	Colour	Art.No
LC-plus-DALI-SYS 280	white	93308

Accessories

Designation	Colour	Art.No
IR-PD-DALI-Mini	-	92112
Wire basket BSK (Ø 164 x 143 mm)	white	92467
Pole holder	stainless steel	93220
Wall holder	white	93222
Wall holder	anthracite	93221
Blinds LC-plus 280		32698

Technical data

Voltage:	via DALI Bus, max. 22.5 V DC
Dimensions:	110 x 68 x 78 mm
Settings:	B.E.G. PC Tools, B.E.G. DALI-SYS router
Typ. power input:	7 mA
Detection area:	horizontal 280° (Wall mounting)
Range:	max. 16 m across max. 9 m towards
Monitored area (tangential movement):	620 m² / 2.5 m mounting height
Mounting height min./max./recommended:	2 m / 3 m / 2.5 m
Degree / class of protection:	IP54 / Class II
Impact strength:	IK02
Ambient temperature:	-25 °C to +50 °C
Housing:	polycarbonate, UV-resistant
Material color:	white mat, similar to RAL9010
Follow-up time:	1 sec – 120 min
Orientation light:	5 – 100 % / 1 s – 120 min
Brightness set value:	10 – 2500 Lux

Product information

Wide motion detection range DALI multisensor for wall or outside corner mounting

Powered via DALI bus

Seemless integration in B.E.G. LUXOMAT®net DALI-SYS

Detection area can be extended thanks to master-slave-mode

Semi-automatic, full-automatic or twilight switch mode

Integrated daylight harvesting circuit (or switch output)

Guided Light, Soft-Start PLUS, Orientation light PLUS

DIP- and HEX-switch for quick commissioning with basic functionality

Works out-of-the box for easy installation check

Full range of functions can only be activated with other products of the product group B.E.G. LUXOMAT®net DALI-SYS

This article is a component of a lighting control system from B.E.G., which supports the use of DALI control gear (luminaires, relays) from other manufacturers

The use of DALI application controllers from other manufacturers is not supported

The use of DALI input devices (sensors, push-buttons) from other manufacturers is not supported

Additional system components (hardware) from B.E.G. are required

Additional services (planning, commissioning and maintenance) from B.E.G. are required

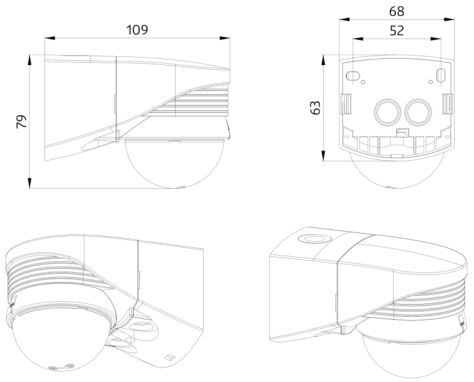
109
79
68
52
63

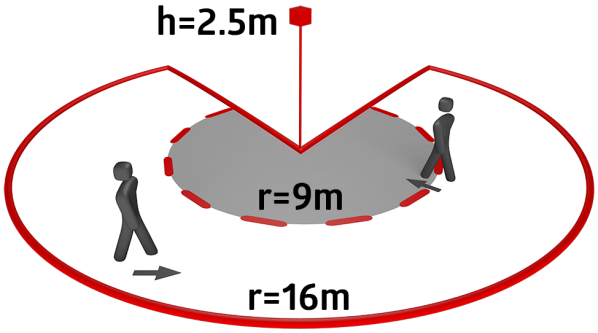
h=2.5m
r=9m
r=16m

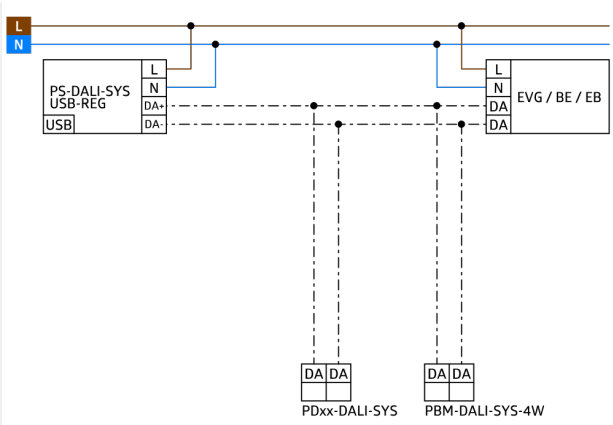
L
N
PS-DALI-SYS
USB-REG
USB
L
N
DA+
DA-
L
N
DA
DA
EVG / BE / EB
DA DA
PDxx-DALI-SYS
DA DA
PBM-DALI-SYS-4W

Accessories



IR-PD-DALI-Mini
Art.No: 92112

Battery: 3.0 V Lithium CR2032 (inclusive)
Dimensions: 57 x 35 x 7 mm
Material color: -



Wire basket BSK (Ø 164 x 143 mm)
Art.No: 92467

Dimensions: Ø 164 x 143 mm
Impact strength: IK09
Housing: coated steel basket



Pole holder
Art.No: 93220

Dimensions: 188 x 98 x 134 mm
Housing: stainless steel
Material color: stainless steel



Wall holder
Art.No: 93222

Dimensions: 188 x 98 x 134 mm
Material color: white



Wall holder
Art.No: 93221

Dimensions: 188 x 98 x 134 mm
Material color: anthracite



Blinds LC-plus 280
Art.No: 32698

Housing: polycarbonate, UV-resistant
Material color: transparent