B.E.G. LUXOMAT®



LC-plus 280

91008 EAN: 4007529910083

230V PIR outdoor motion detector with 280° detection angle and a range of up to 16 m (620 m²), remote-controlled

Order data

Designation	Colour	Art.No
LC-plus 280	white	91008

Areas of application

- outdoor areas (entrances/access roads)
- parking areas
- underground car parks
- high-bay warehouse

Accessories

Designation	Colour	Art.No
RC-Arc extinction kit	white	10880
Mini-RC-Arc extinction kit		10882
BLE-IR-Adapter	black	93067
IR-LC-plus	-	92095
IR-LC-Mini	-	92093
Wire basket BSK (Ø 164 x 143 mm)	white	92467
Pole holder	stainless steel	93220
Wall holder	white	93222
Wall holder	anthracite	93221
Blinds LC-plus 280		32698

Technical data

Voltage:	110 – 240 V AC 50 / 60 Hz
Dimensions:	110 x 68 x 78 mm
Power consumption:	approx. 0.24 W
Detection area:	horizontal 280° (Wall mounting)
Range:	max. 16 m across max. 9 m towards
Monitored area (tangential movement):	620 m² / 2.5 m mounting height
Mounting height min./max./recommended:	2 m / 3 m / 2.5 m
Degree / class of protection:	IP54 / Class II
Impact strength:	IK02
Ambient temperature:	-25 °C to +50 °C
Housing:	polycarbonate, UV-resistant
Material color:	white mat, similar to RAL9010
Channel 1 (lighting control)	
Switching power:	2000 W, cos φ = 1 1000 VA, cos φ = 0.5 400 W LED
Type of contact (k):	1x µ-contact, NO contact
Follow-up time:	15 sec – 16 min, Pulse
Switch-on threshold:	2 – 500 Lux

Product information

Motion detector with downward detection for gapless monitoring

Adjustable ball head

Zero crossing switching

Additional functions can be set up using the optional remote control.

Easy mounting thanks to plug-in base

Detection area can be restricted with blinds

Special socket for external corner mounting included

Factory settings 3 min and 20 lux

Application examples:
outdoor areas (entrances/access roads), parking areas, underground car parks, high-bay warehouse

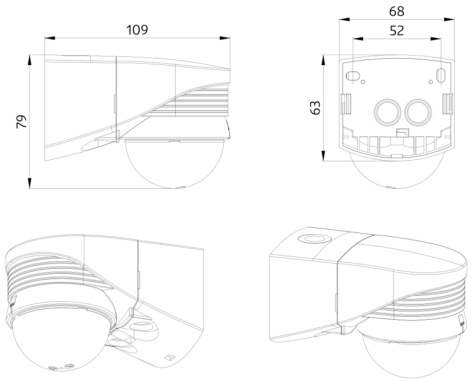
109
79
68
52
63

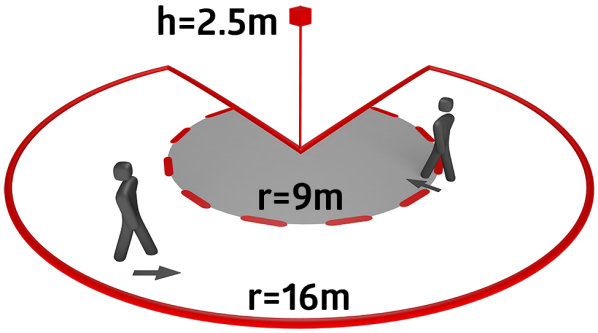
h=2.5m
r=9m
r=16m

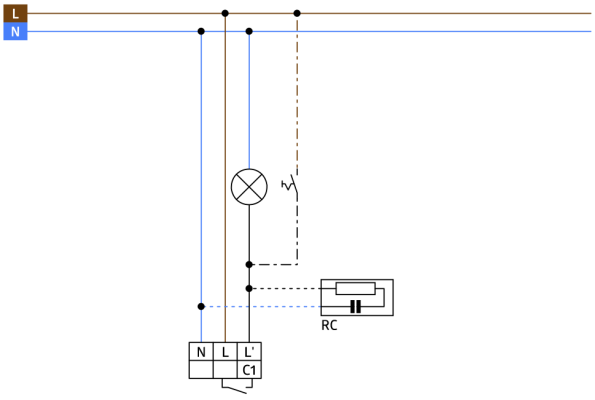
L
N
RC
N
L
L'
C1

Accessories



RC-Arc extinction kit
Art.No: 10880

Voltage: 230 V AC ±10%
Dimensions: 38 x 12 x 26 mm
Degree / class of protection: IP20 / Class II



Mini-RC-Arc extinction kit
Art.No: 10882

Voltage: 230 V AC ±10%
Dimensions: 50 x 23 x 8 mm
Degree / class of protection: IP20 / Class II



BLE-IR-Adapter
Art.No: 93067

Dimensions: 40 x 55 x 103 mm
Material color: black
Frequency: 2.4 GHz ISM band, GFSK
0.2 dBm + 5.3 dBi = 5.5 dBm

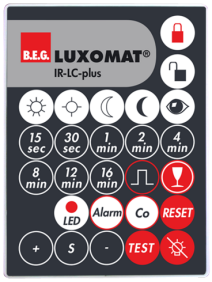

IR-LC-plus
Art.No: 92095

Battery: 3.0 V Lithium CR2032 (inclusive)
Dimensions: 80 x 60 x 8 mm
Material color: -



IR-LC-Mini
Art.No: 92093

Battery: 3.0 V Lithium CR2032 (inclusive)
Dimensions: 57 x 35 x 7 mm
Material color: -



Wire basket BSK (Ø 164 x 143 mm)
Art.No: 92467

Dimensions: Ø 164 x 143 mm
Impact strength: IK09
Housing: coated steel basket



Pole holder
Art.No: 93220

Dimensions: 188 x 98 x 134 mm
Housing: stainless steel
Material color: stainless steel



Wall holder
Art.No: 93222

Dimensions: 188 x 98 x 134 mm
Material color: white



Wall holder
Art.No: 93221

Dimensions: 188 x 98 x 134 mm
Material color: anthracite



Blinds LC-plus 280
Art.No: 32698

Housing: polycarbonate, UV-resistant
Material color: transparent