B.E.G. LUXOMAT® net



LC-Mini 120-BMS DALI-2

93541 EAN: 4007529935413

DALI-2 (BMS) Outdoor PIR Multisensor with 120° detection angle and up to 10 m range (100 m²), DALI-2 Input Device

Order data

Designation	Colour	Art.No
LC-Mini 120-BMS DALI-2	white	93541

Accessories

Designation	Colour	Art.No
Wire basket BSK (Ø 164 x 143 mm)	white	92467
Blinds LC-Mini		33232

Technical data

Voltage:	via DALI Bus, max. 22.5 V DC
Dimensions:	80 x 70 x 55 mm
Settings:	via DALI-Bus and application which supports DALI multisensors according to IEC62386, parts 101, 103, 303 and 304
Typ. power input:	7 mA
Settling time:	200 ms
Power consumption:	approx. 0.5 W
Detection area:	horizontal 120° (Wall mounting)
Range:	max. 10 m across max. 4 m towards
Monitored area (tangential movement):	100 m² / 2.5 m mounting height
Mounting height min./max./recommended:	2 m / 3 m / 2.5 m
Degree / class of protection:	IP44 / Class II
Measured light output:	0 - 4095 Lux, Mixed light measuring
Ambient temperature:	-25 °C to +50 °C
Housing:	polycarbonate, UV-resistant
Material color:	white mat, similar to RAL9010

Product information

DALI-2 multisensor (input device) with a detection area of 120°

DALI-2 certified product

Powered via DALI bus

Adjustable ball head

Detection area can be restricted with blinds

DALI multimaster technology according to IEC 62386 part 103

Instance 0 provides information regarding occupancy and movement for the DALI-Bus according to IEC 62386 part 303

Instance 1 provides LUX values for the DALI-Bus according to IEC 62386 part 304

Parameterisation is possible via mandatory Multimaster-Application-Controller of any manufacturer. This controller must support IEC 62386 parts 101/103/303/304.

Individual adaption of the PIR sensor sensitivity

Status LEDs can be activated / deactivated

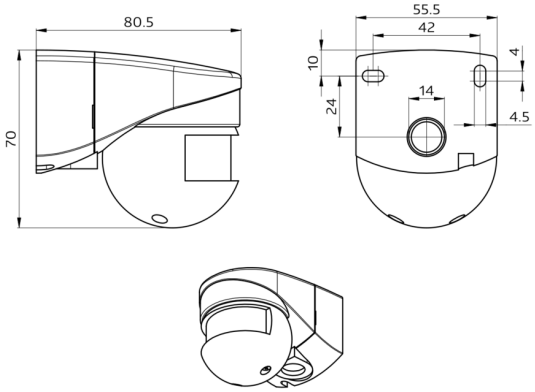
80.5
70
55.5
42
10
4
14
24
4.5

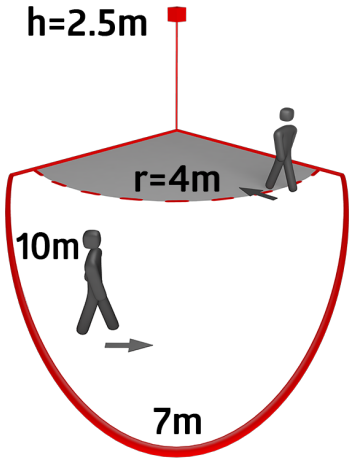
h=2.5m
r=4m
10m
7m

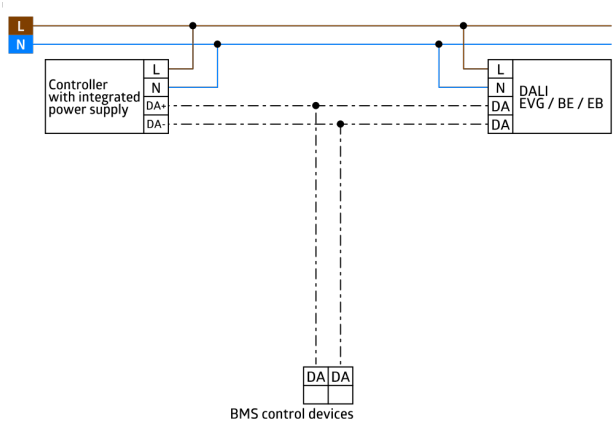
L
N
Controller
with integrated
power supply
L
N
DA+
DA-
L
N
DA
DA
DALI
EVG / BE / EB
DA
DA
BMS control devices

Accessories



Wire basket BSK (Ø 164 x 143 mm)
Art.No: 92467

Dimensions: Ø 164 x 143 mm
Impact strength: IK09
Housing: coated steel basket

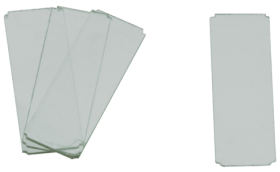

Blinds LC-Mini
Art.No: 33232

Housing: polycarbonate, UV-resistant
Material color: transparent