B.E.G. LUXOMAT®



LC-Click-N 140

91001 EAN: 4007529910014

230V PIR outdoor motion detector with a 140° detection angle and a range of up to 12 meters (170 m²), with anti-crawl protection

Order data

Designation	Colour	Art.No
LC-Click-N 140	white	91001

Areas of application

- outdoor areas (entrances/access roads)
- parking areas
- underground car parks

Accessories

Designation	Colour	Art.No
RC-Arc extinction kit	white	10880
Mini-RC-Arc extinction kit		10882
Wire basket BSK (Ø 164 x 143 mm)	white	92467
Pole holder	stainless steel	93220
Wall holder	white	93222
Wall holder	anthracite	93221
Blinds LC-Click-N		32699

Technical data

Voltage:	110 – 240 V AC 50 / 60 Hz
Dimensions:	103 x 78 x 84 mm
Power consumption:	approx. 0.4 W
Detection area:	horizontal 140° (Wall mounting)
Range:	max. 12 m across max. 4 m towards max. 2 m anti-creep protection
Monitored area (tangential movement):	170 m² / 2.5 m mounting height
Mounting height min./max./recommended:	2 m / 3 m / 2.5 m
Degree / class of protection:	IP54 / Class II
Impact strength:	IK04
Ambient temperature:	-25 °C to +50 °C
Housing:	polycarbonate, UV-resistant
Material color:	white mat, similar to RAL9010
Channel 1 (lighting control)	
Switching power:	1000 W, cos φ = 1 500 VA, cos φ = 0.5 400 W LED
Type of contact (k):	1x µ-contact, NO contact
Follow-up time:	4 sec – 20 min
Switch-on threshold:	2 – 500 Lux

Product information

Motion detector with 140° detection area and 180° creep protection

Adjustable ball head

Detection area can be restricted with blinds

Zero crossing switching

Simple mounting thanks to plug base

Cable entry possible from above, from below and from behind

Can be mounted on standard flush-mount boxes

Application examples:
outdoor areas (entrances/access roads), parking areas, underground car parks

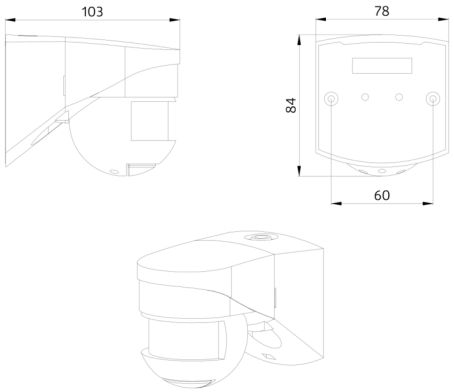
103
78
84
60

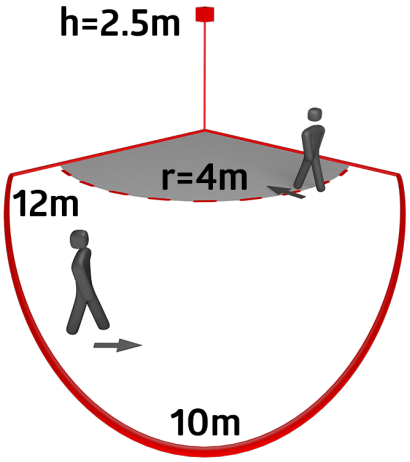
h=2.5m
r=4m
12m
10m

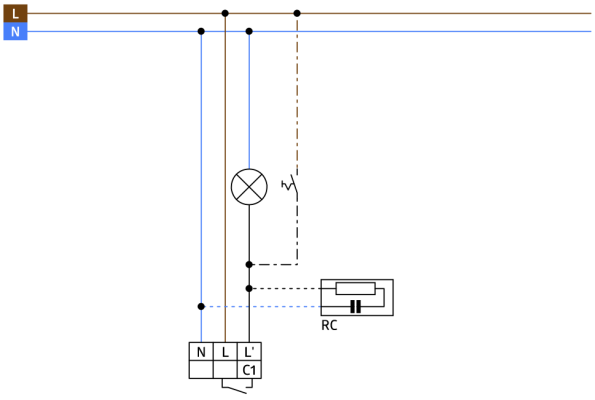
L
N
RC
N
L
L'
C1

Accessories



RC-Arc extinction kit
Art.No: 10880

Voltage: 230 V AC ±10%
Dimensions: 38 x 12 x 26 mm
Degree / class of protection: IP20 / Class II



Mini-RC-Arc extinction kit
Art.No: 10882

Voltage: 230 V AC ±10%
Dimensions: 50 x 23 x 8 mm
Degree / class of protection: IP20 / Class II



Wire basket BSK (Ø 164 x 143 mm)
Art.No: 92467

Dimensions: Ø 164 x 143 mm
Impact strength: IK09
Housing: coated steel basket

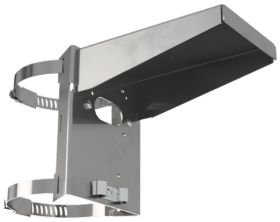

Pole holder
Art.No: 93220

Dimensions: 188 x 98 x 134 mm
Housing: stainless steel
Material color: stainless steel



Wall holder
Art.No: 93222

Dimensions: 188 x 98 x 134 mm
Material color: white



Wall holder
Art.No: 93221

Dimensions: 188 x 98 x 134 mm
Material color: anthracite





Blinds LC-Click-N
Art.No: 32699

Housing: polycarbonate, UV-resistant
Material color: transparent