B.E.G. LUXOMAT®



LC-Click 200

91102 EAN: 4007529911028

230V PIR outdoor motion detector with a 200° detection angle and a range of up to 12 meters (250 m²)

Order data

Designation	Colour	Art.No
LC-Click 200	white	91102

Accessories

Designation	Colour	Art.No
RC-Arc extinction kit	white	10880
Mini-RC-Arc extinction kit		10882
Wire basket BSK (Ø 164 x 143 mm)	white	92467
Pole holder	stainless steel	93220
Wall holder	white	93222
Wall holder	anthracite	93221
Frame LC	white	91080

Technical data

Voltage:	110 – 240 V AC 50 / 60 Hz
Dimensions:	90 x 67 x 82 mm
Power consumption:	approx. 0.4 W
Detection area:	horizontal 200° (Wall mounting)
Range:	max. 12 m across max. 4 m towards
Monitored area (tangential movement):	250 m² / 2.5 m mounting height
Mounting height min./max./recommended:	2 m / 3 m / 2.5 m
Degree / class of protection:	IP44 / Class II
Ambient temperature:	-25 °C to +50 °C
Housing:	polycarbonate, UV-resistant
Material color:	white mat, similar to RAL9010
Channel 1 (lighting control)	
Switching power:	1000 W, cos φ = 1 500 VA, cos φ = 0.5 400 W LED
Type of contact (k):	1x µ-contact, NO contact
Follow-up time:	4 sec – 10 min
Switch-on threshold:	10 – 300 Lux

Product information

Motion detector with detection area of 200°

Adjustable ball head

Simple mounting thanks to plug base

Detection area can be restricted with blinds

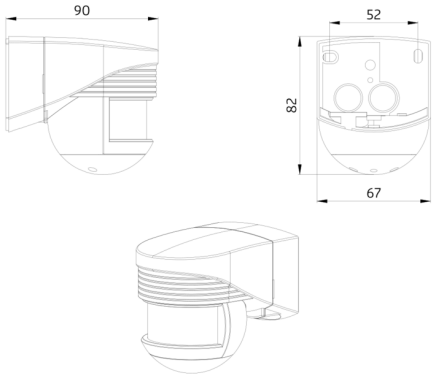
90
52
82
67

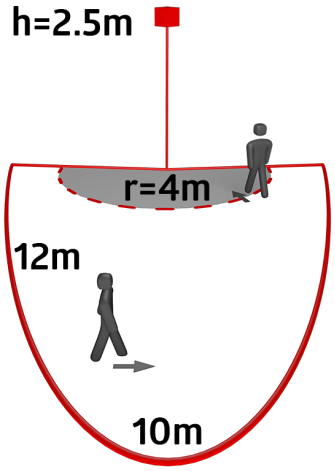
h=2.5m
r=4m
12m
10m

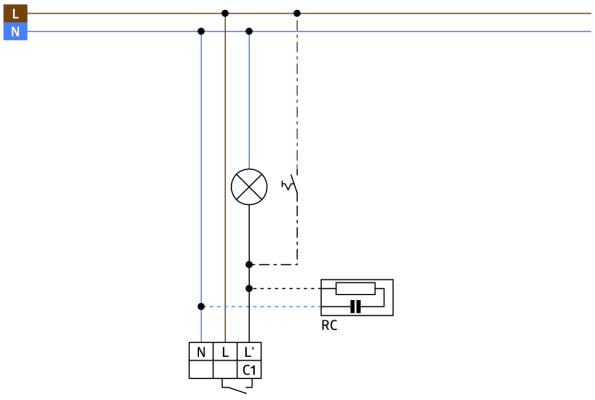
L
N
RC
N
L
L'
C1

Accessories



RC-Arc extinction kit
Art.No: 10880

Voltage: 230 V AC ±10%
Dimensions: 38 x 12 x 26 mm
Degree / class of protection: IP20 / Class II



Mini-RC-Arc extinction kit
Art.No: 10882

Voltage: 230 V AC ±10%
Dimensions: 50 x 23 x 8 mm
Degree / class of protection: IP20 / Class II



Wire basket BSK (Ø 164 x 143 mm)
Art.No: 92467

Dimensions: Ø 164 x 143 mm
Impact strength: IK09
Housing: coated steel basket

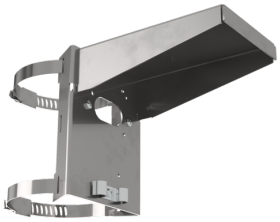

Pole holder
Art.No: 93220

Dimensions: 188 x 98 x 134 mm
Housing: stainless steel
Material color: stainless steel



Wall holder
Art.No: 93222

Dimensions: 188 x 98 x 134 mm
Material color: white



Wall holder
Art.No: 93221

Dimensions: 188 x 98 x 134 mm
Material color: anthracite



Frame LC
Art.No: 91080

Dimensions: 78 x 78 x 13 mm
Housing: polycarbonate, UV-resistant
Material color: white