B.E.G. LUXOMATIC®



L8-LEDN-HF

94455 EAN: 4007529944552

230V LED round light for wall and ceiling mounting with built-in 5.8 GHz RF motion sensor, 12W, 1000 lm, 4000K, Ø up to 16 m, IP40.

Order data

Designation	Colour	Art.No
L8-LEDN-HF	white	94455

Technical data

Voltage:	230 V AC ±10% 50 / 60 Hz
Dimensions:	Ø 300 x 110 mm
Luminous flux / intensity:	LED circuit board securely mounted Colour temperature: 4000 K neutral white Luminous flux of LED: 1400 lm Luminous flux of light 1000 lm Peak: 312 cd
Efficiency:	83 lm/W
Photobiological safety:	RG 0
Colour reproduction:	CRI 81.3 / TM30: 80.4
Rated life time:	50000 h (L80/B10)
Power consumption:	12 W / PF 0.94
Degree / class of protection:	IP40 / Class I
Impact strength:	IK02
Ambient temperature:	-20 °C to +40 °C
Housing:	Coated sheet steel case with LED circuit board, plastic cover Lens: PMMA diffuser, white
Material color:	white
Microwave detector	
Radar / HF technology:	5.8 GHz, < 10 mW
Switching power:	1200 W, cos φ = 1 600 VA, cos φ = 0.5
Detection area:	horizontal 360° Ø 0.4 – 16 m
Follow-up time:	5 sec – 15 min
Switch-on threshold:	2 – 2000 Lux

Product information

Round LED light for wall or ceiling mounting with integrated microwave detector

Energy efficient light with long service life > 50,000 hours

Broad light distribution using diffused light covers

Extremely short response time

HF technology: 5.8 GHz - reacts to the smallest motion, independently of temperature

Microwave detector not visible externally

Possibility to connect other lights which are also controlled by the one microwave detector

Application examples:
corridors, halls, staircases, storage rooms, cellars, toilets

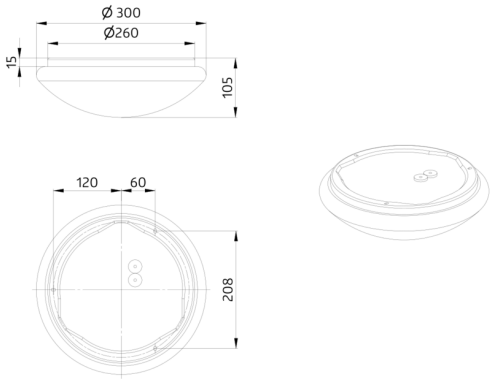

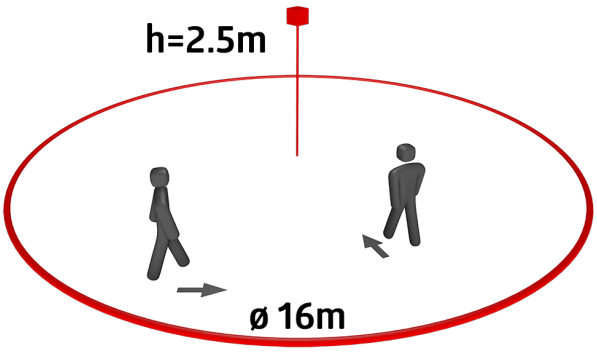

h (m)	Ø (m)	E (lx)
1.0	3.4	312
2.0	6.9	78
3.0	10.3	35
4.0	13.7	20
5.0	17.1	12

